NKM-G / NKP-G

STANDARDISED MONOBLOC CENTRIFUGAL ELECTRIC PUMPS

ENERGY EFFICIENCY IE3 ≥ 7.5 kW

IE2 ≥ 7.5kW ONLY FOR EXTRA MARKETS EU

TECHNICAL DATA

Rotation speed: 1450 - 2900 1/min.

Operating range: from 1 to 460 m^3/h with head of up to 96 metres.
Pumped liquid: clean, free of solids and abrasives, non-viscous, non-aggressive, non-crystallised and chemically neutral, with properties similar to water.
Pumped liquid temperature range: from -10°C to +140°C.
Maximum ambient temperature: +40 °C.
Maximum operating pressure: 16 bar - 1600 kPa (for DN 200 max 10 bar).
Flanging: PN 16 DIN 2533 - PN 10 DIN 2532 for DN 200
Protection class: IP55
Insulation class: F
Standard voltage: 230/400 V 50 Hz up to 2,2 kW included
400 V Δ 50 Hz above 2,2 kW
Installation: normally in horizontal or vertical position, provided that the motor is always above the pump.
Special executions on requests: pumps for liquids other than water. Other voltages and/or frequencies.

APPLICATIONS

Standardised centrifugal monobloc electric pumps with coupling, designed for a wide range of applications, such as:
- Water supply.
- Hot water circulation for the heating system.
- Circulation of cold water for air conditioning and refrigeration systems.
- Transfer of liquids in agricultural, horticultural, and industrial environments.
- Installation of pumping assemblies.

CONSTRUCTION FEATURES OF THE PUMP

Cast iron single stage spiral body complying with DIN-EN 733 (formerly DIN 24255), cast iron support, flanges complying with DIN 2533, and DIN 2532 for DN 200. Cast iron impeller, closed and dynamically balanced, with compensation of the axial thrust through balancing holes, operation on interchangeable wear rings (on request). AISI 304 stainless steel pump shaft.
Seal device: standardised mechanical seal according to DIN 24960 in carbon/silicon carbide with EPDM OR rings.

CONSTRUCTION FEATURES OF THE MOTOR

Closed asynchronous type motor with external ventilation, B3/B5 construction, two poles for NKP and four poles for NKM. Rotor running on ball bearings, largely oversized to ensure low noise and durability. For the protection of the motor, we recommend the use of remote overload cut-outs, in compliance with current local regulations. For liquids with densities higher than water, motors with proportionally higher powers are required.
Construction according to the standard: CEI 2-3.
IE2 motors as standard from 0,75 kW - IE3 ≥ 7,5 kW (IE2 ≥ 7,5 kW only outside the EU)

DAB PUMPS reserves the right to make modifications without notice.

MATERIALS

No.	PARTS	MATERIALS (standard version)
1	PUMP BODY	CAST IRON 250 UNI ISO 185
3	SUPPORT	CAST IRON 250 UNI ISO 185
4	IMPELLER	CAST IRON 250 UNI ISO 185
7A	PUMP SHAFT	AISI 304 STAINLESS STEEL - UNI 6900/71
16	MECHANICAL SEAL	CARBON/SILICON CARBIDE - EPDM
28	OR RING	EPDM
31	SEAL SPACER	AISI 304 STAINLESS STEEL - UNI 6900/71
36	SEAL HOLDING DISC	CAST IRON 250 UNI ISO 185
37	BLEED COCK	AISI 304 STAINLESS STEEL - UNI 6900/71

No.	PARTS	MATERIALS (version on request)
4	IMPELLER	BRONZE GCuSn5Zn5Pb5 UNI 7013/8a-72
16	MECHANICAL SEAL	SILICON CARBIDE/SILICON CARBIDE - EPDM SILICON CARBIDE/SILICON CARBIDE - VITON CARBON/SILICON CARBIDE - VITON

VERSION WITH MOTOR UP TO 7,5 KW INCLUDED

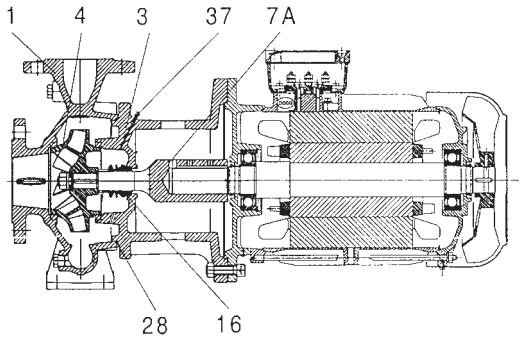

VERSION WITH MOTOR OVER 7,5 KW

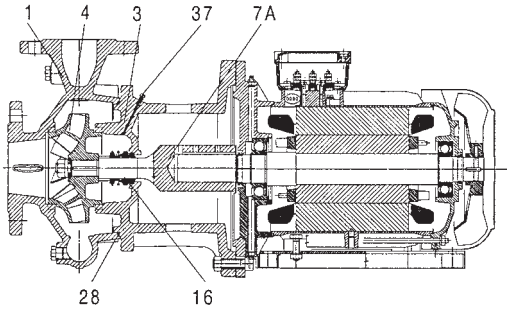

VERSION FOR MODELS:
NKM-G 65-315/309/11 /4
NKM-G 100-315/316/22 /4, NKM-G125-250/243/15 /4,
NKM-G 80-200/200/4 /4,
NKM-G 80-250/270/11 /4, NKM-G 80-315/305/15 /4,
NKM-G 80-315/320/18.5 /4, NKM-G 80-315/334/22 /4,
NKM-G 100-250/250/11 /4, NKM-G 150-200/218/11 /4

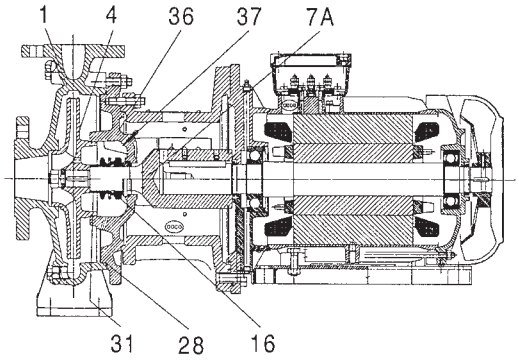

NKM-G / NKP-G

STANDARDISED MONOBLOC CENTRIFUGAL ELECTRIC PUMPS

FLANGE SIZES (mm)

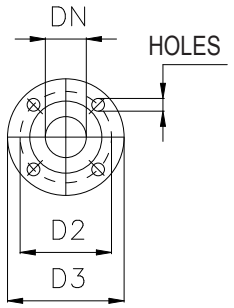

		Nominal diameter (DN)			
		DIN 2533 PN 16			
DN		32	40	50	65
D2		100	110	125	145
D3		140	150	165	185
HOLES	Ø	18			
	No.	4			

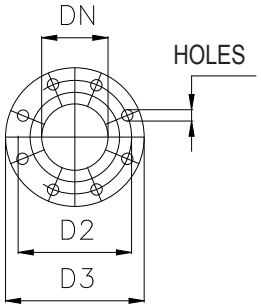

Nominal diameter (DN)				
DIN 2533 PN 16				DIN 2533 PN 16
80	100	125	150	200
160	180	210	240	295
200	220	250	285	340
18				22
8				8

– Denomination index:
(example)

NKM - G 100 - 200 / 198 / A W /BAQE / 5.5 / 4

- NKM = 4 poles; NKP = 2 poles
- G = with coupling
- Nominal diameter of the delivery port:
- Nominal diameter of the impeller:
- Actual diameter of the impeller:
- Material codes: A = Cast iron; B = Cast iron with bronze impeller
- Wear rings (only if present)
- Seal description
- Motor power in kW
- Number of poles: 4 = 4 poles; 2 = 2 poles

DESCRIPTION OF THE MECHANICAL SEAL

Position	Code	Description of the seal
1	A	O-ring seal with fixed guide
	B	Rubber bellows seal
	C	O-ring seal with spring guide
	D	O-ring seal balanced
	M	Rubber bellows seal
	X	Metal bellows seal
Position	Code	Materials
2 & 3	A	Impregnated carbon/metal
	B	Impregnated carbon/resin
	C	Other carbon types
	S	Chromium steel
	U	Tungsten carbide
	Q	Silicon carbide
	V	Aluminium oxide (ceramic)
	X	Other ceramic types
Position	Code	Materials
4	P	Nitrile rubber (NBR)
	S	Silicon rubber
	T	Teflon (PTFE)
	E	EPDM
	V	Viton
	M	PTFE coated O-ring
Position	Code	Materials
5	V	Reinforced

DAB PUMPS reserves the right to make modifications without notice.

NKM-G / NKP-G

STANDARDISED MONOBLOC CENTRIFUGAL ELECTRIC PUMPS

PRODUCT CODE DESCRIPTION

NOMINAL DIAMETER OF THE IMPELLER	Cod.
125	1
160	2
200	3
250	4
315	5
125.1	K
160.1	L
200.1	M

PUMP TYPE	Cod.
32	1
40	2
50	3
65	4
80	5
100	6
125	7
150	8

IDENTIFICATION	Cod.
DAB PUMPS S.p.A.	D

IDENTIFICATION	Cod.
DAB PUMPS S.p.A.	1

Cod.	PUMP/IMPELLER MATERIALS
1	A (01) = cast iron/cast iron
2	B (03) = cast iron/bronze
5	A (01) + Wr*
6	B (03) + Wr*

* With wear rings

Cod.	SEAL DEVICE
1	BAQE
5	BQQV*
7	BAQV*
G	BQQE*

* On request

Cod.	CODE PUMP TYPE
B	NKM-G / NKP-G 50 Hz
C	NKM-G / NKP-G 60 Hz

Cod.	P2 NOMINAL KW
1	0.37
2	0.55
3	0.75
4	1.1
5	1.5
6	2.2
7	3
8	4
9	5.5
A	7.5
B	11
C	15
D	18.5
E	22
F	30

Cod.	VOLTAGE	Poles
0	Without motor	
1	3 x 220-240/380-415 V 50 Hz(<0,75 kW) 3 x 220-277/380-480 V 60 Hz	2
2	3 x 380-480 V 60 Hz	2
3	3 x 220-240/380-415 V 50 Hz(<0,75 kW) 3 x 220-277/380-480 V 60 Hz	4
4	3 x 380-480 V 60 Hz	4
A	3 x 220-240/380-415 V 50 Hz - IE2	2
B	3 x 380-415 V 50 Hz - IE2	2
C	3 x 220-240/380-415 V 50 Hz - IE2	4
D	3 x 380-415 V 50 Hz - IE2	4
U	3 x 220-240/380-415 V 50 Hz - IE3	2
V	3 x 380-415 V 50 Hz - IE3	2
W	3 x 220-240/380-415 V 50 Hz - IE3	4
X	3 x 380-415 V 50 Hz - IE3	4

Product code

1	D	1	1	1	1	B	1	1

DAB PUMPS reserves the right to make modifications without notice.

NKM-G RANGE

STANDARDISED MONOBLOC CENTRIFUGAL ELECTRIC PUMPS

PERFORMANCE RANGE

The performance curves are based on kinematic viscosity values = 1 mm²/s and density equal to 1000 kg/m³. Curve tolerance according to ISO 9906.

GRAPHIC SELECTION TABLE

≅ 1450 1/min

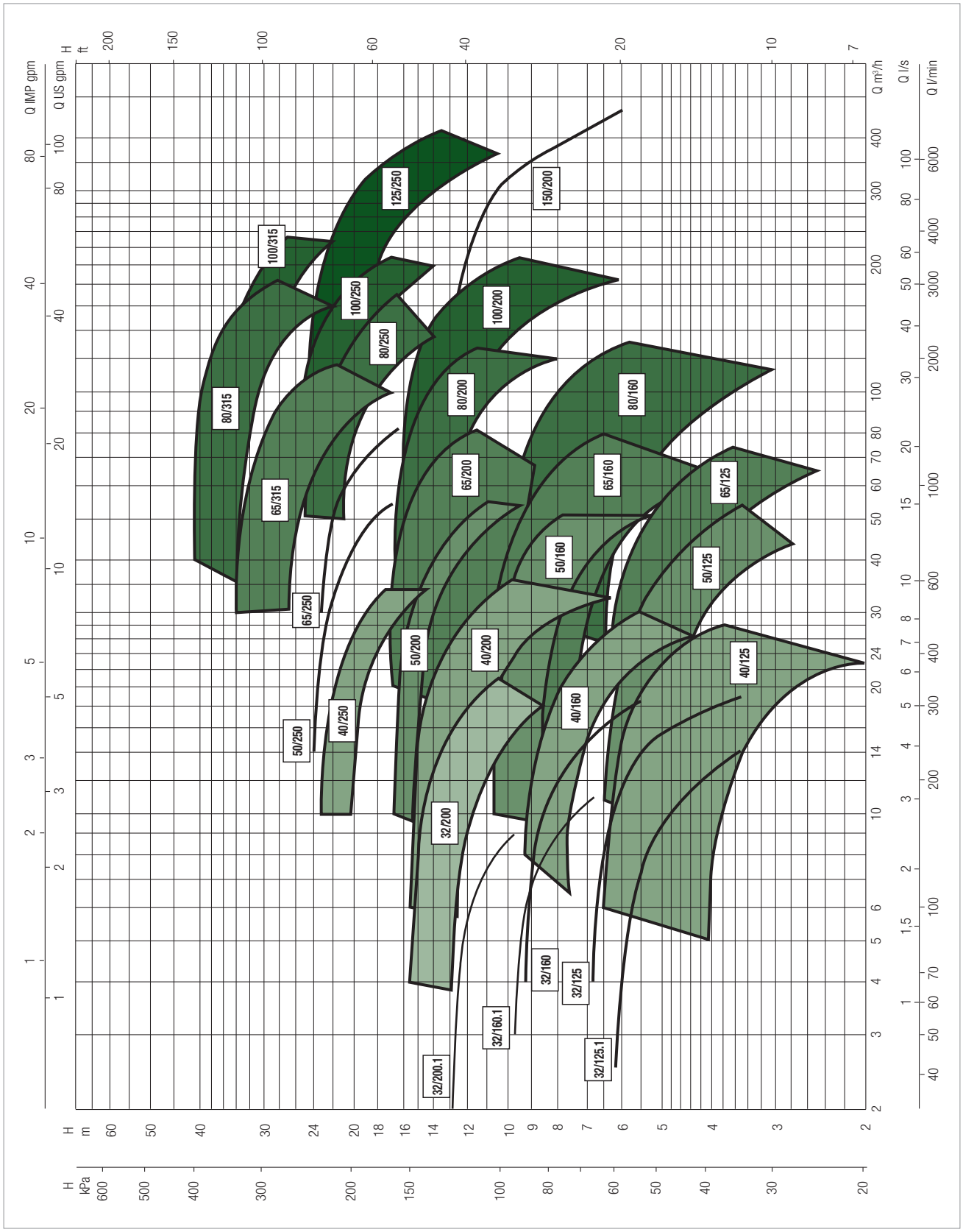

SELECTION TABLE - NKM-G

MODEL	Q= m³/h	0	6	12	18	24	30	36	42	48	54	60	66	72	78	84	90	102	114
	Q= l/min	0	100	200	300	400	500	600	700	800	900	1000	1100	1200	1300	1400	1500	1700	1900
NKM-G 32-125.1/140/0.25/4		6.2	5.8	4.2															
NKM-G 32-125/142/ 0.37/4		7	6.75	5.85	4.2														
NKM-G 32-160.1/169/0.37/4		8.9	8.2	4.6															
NKM-G 32-160/169/0.55/4		9.4	9	7.9	5.6														
NKM-G 32-200.1/200/0.55/4		12.7	11.2	7.2															
NKM-G 32-200/200/ 0,75/4		13	12.5	11.1	8.45														
NKM-G 32-200/219/ 1,1 /4		16	15.4	14.3	12.2														
NKM-G 40-125/115/ 0.25/4		4.2	4.1	3.7	3	2.1													
NKM-G 40-125/130/ 0.37/4		5.4	5.3	5. 4.	4	3.5													
NKM-G 40-125/142/ 0.55/4		6.6	6.5	6.2	5.7	4.8													
NKM-G 40-160/153/ 0.55/4		7.6	7.6	7.5	6.7	5.5													
NKM-G 40-160/166/ 0.75/4		9.2	9.2	9	8.4	7.4	5.7												
NKM-G 40-200/200/ 1,1 /4		12.5	12.5	12.3	11.2	9.7	7.7												
NKM-G 40-200/219/ 1,5 /4		15.6	15.6	15.3	14.7	13.4	11.8	9.8											
NKM-G 40-250/245/ 2,2 /4		20.6	20.5	20.1	19.2	17.8	16												
NKM-G 40-250/260/ 3 /4		23.3	23.1	22.8	22.2	20.8	19												
NKM-G 50-125/130/ 0.55/4	H (m)	5.5		5.2	5	4.7	4.3	3.9	3.3	2.6									
NKM-G 50-125/141/ 0.75/4		6.5		6.3	6.1	5.8	5.5	5	4.5	3.9									
NKM-G 50-160/161/ 1.1 /4		8.6		8.6	8.5	8.2	7.8	7.3	6.7	5.7									
NKM-G 50-160/177/ 1,5 /4		10.7		10.7	10.7	10.5	10.2	9.8	9.2	8.3									
NKM-G 50-200/210/ 2,2 /4		15.3		15.3	15.2	14.8	14	13.3	12.1	10.8	9.4								
NKM-G 50-200/219/ 3 /4		16.8		16.8	16.5	16.1	15.5	14.6	13.6	12.4	10.9								
NKM-G 50-250/263/ 4 /4		23.8		23.8	23.8	23.4	22.7	21.6	20.4	19	17.1								
NKM-G 65-125/130/ 0.75/4		5.1		4.9	4.8	4.75	4.7	4.4	4.2	3.8	3.4	3	2.5						
NKM-G 65-125/144/ 1.1 /4		6.5		6.4	6.4	6.3	6.2	6	5.75	5.5	5.1	4.65	4.2	3.75					
NKM-G 65-160/153/ 1,1 /4		7.4		7.4	7.3	7.15	6.9	6.65	6.25	5.8	5.3	4.4							
NKM-G 65-160/165/ 1,5 /4		8.9			8.8	8.7	8.6	8.3	8	7.6	7.15	6.6	6						
NKM-G 65-160/177/ 2,2 /4		10.5				10.4	10.3	10.2	9.9	9.6	9.2	8.75	8.2	7.4	6.6				
NKM-G 65-200/210/ 3 /4		15.3				15.2	15.2	15.1	14.6	14.1	13.5	12.9	12.2	11.3					
NKM-G 65-200/219/ 4 /4		17				17	16.9	16.8	16.4	16.2	15.8	15.2	14.3	13.8	12.6				
NKM-G 65-250/263/ 5,5 /4		24.1				23.8	23.6	23.3	22.8	22.3	21.5	20.8	19.7	18.6	17.3				
NKM-G 65-315/279/ 7,5 /4		27							26	25.5	25	24.5	23.6	22.7	21.5	20.2	19		
NKM-G 65-315/309/11 /4		34.2							33.2	33	32.5	32	31.5	30.7	29.8	29	28	25	21.7

DAB PUMPS reserves the right to make modifications without notice.

NKM-G

STANDARDISED MONOBLOC CENTRIFUGAL ELECTRIC PUMPS

SELECTION TABLE - NKM-G

MODEL	Q= m³/h	0	30	36	42	48	54	60	66	72	78	84	90	102	114	120	150	180	210	240	270	300	330	360	390	420
	Q= l/min	0	500	600	700	800	900	1000	1100	1200	1300	1400	1500	1700	1900	2000	2500	3000	3500	4000	4500	5000	5500	6000	6500	7000
NKM-G 80-160//153-136/1.5/4	H (m)	6.5	6.35	6.3	6.2	5.95	5.75	5.55	5.3	5	4.7	4.5	4.25	3.65	3											
NKM-G 80-160/163/ 2,2 /4		8.65	8.5	8.45	8.3	8.15	7.9	7.7	7.4	7.2	6.9	6.65	6.3	5.7	4.9	4.6										
NKM-G 80-160/177/ 3 /4		10.2	10.2	10.1	10	9.9	9.75	9.65	9.5	9.25	9	8.8	8.6	7.9	7.2	6.7										
NKM-G 80-200/200/ 4 /4		13.2			13.1	13	12.9	12.8	12.7	12.4	12	11.7	11.3	10.4	9.3	8.7										
NKM-G 80-200/222/ 5,5 /4		16.6			16.5	16.5	16.4	16.2	16.1	16	15.7	15.4	15	14.3	13.3	12.7										
NKM-G 80-250/240/ 7,5 /4		20.4			20.3	20.3	20.2	20.1	20	19.9	19.8	19.5	19	18	16.7	16										
NKM-G 80-250/270/11 /4		25.6			25.5	25.5	25.4	25.1	25	24.8	24.6	24.2	24	23	21.5	21										
NKM-G 80-315/305/15 /4		32.9					32.7	32.6	32.6	32.5	32.4	32	31.6	30.5	29.5	28.9	24									
NKM-G 80-315/320/18,5 /4		36.8					36.7	36.7	36.6	36.5	36.5	36.5	36.1	35.5	34.5	34	29.5									
NKM-G 80-315/334/22 /4		41					40.8	40.8	40.7	40.6	40.6	40.4	40.2	39.8	39	38.5	34.8	29								
NKM-G100-200/200/ 5.5 /4		12.7						12.6	12.6	12.5	12.5	12.4	12.3	12	11.5	11.4	10.1	8.5								
NKM-G100-200/214/ 7.5 /4		15.6						15.4	15.4	15.3	15.2	15.1	15	14.7	14.5	14.3	13.3	11.6	9.8							
NKM-G100-250/250/11 /4		21.1						21	21	21	21	21	21	20.9	20	19.8	18	16								
NKM-G100-250/270/15 /4		25.5						25.5	25.5	25.5	25.3	25.1	25.1	25	24.5	24	22.5	20.5	17.5							
NKM-G100-315/300/18.5 /4		32										31.5	31.4	31	30.5	28.8	26	23								
NKM-G100-315/316/22 /4		36										35.5	35.2	35	34.6	33.2	31	28	24							
NKM-G125-250/243/15 /4		19.5												19.3	19.3	19.2	19.2	18.7	17.8	16.8	15.5	14.1	12.5	10.9		
NKM-G125-250/256/18,5 /4		21.9												21.8	21.8	21.7	21.6	21.3	20.5	19.5	18.5	17.2	15.6	14	12	
NKM-G125-250/266/22 /4		24.6												24.4	24.2	24.1	24	23.5	22.9	22	21	19.8	18.5	16.7	15	
NKM-G150-200/218/11 /4		13.2												13.1	13	13	12.8	12.5	12.1	11.5	11	10.4	9.7	9	8	7

NKM-G 32-125.1- STANDARDISED MONOBLOC CENTRIFUGAL ELECTRIC PUMPS FOR AIR CONDITIONING, REFRIGERATION, IRRIGATION, DECANTING, PRESSURISATION SYSTEMS, AND INDUSTRIAL APPLICATIONS

Pumped liquid temperature range: from -10 °C to +140 °C - **Maximum ambient temperature:** +40°C

≅ 1450 1/min

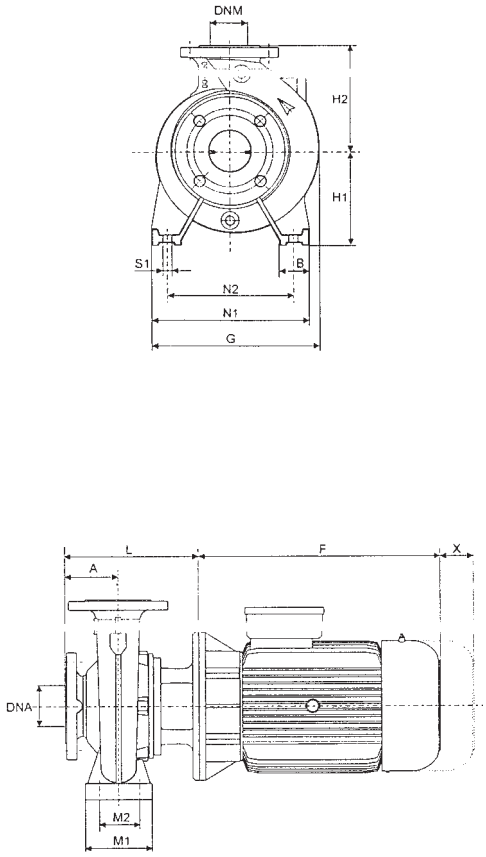

Construction features of the motor: B5

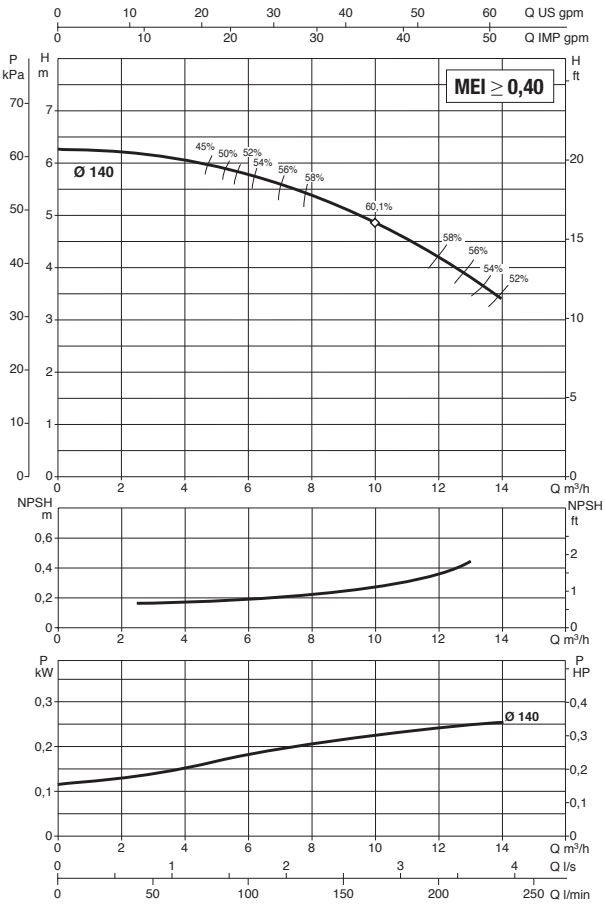

See hydraulic efficiency details on page 291.

The performance curves are based on kinematic viscosity values = 1 mm²/s and density equal to 1000 kg/m³. Curve tolerance according to ISO 9906.

MODEL	ELECTRICAL DATA						
	MOTOR SIZE	POWER INPUT 50 Hz	P2 NOMINAL		In A		TYPE MOTOR
			kW	HP	IE2	IE3	
NKM-G 32-125.1/140/0.25/4	MEC 71	230 - 400 V ~	0.25	0.33	1.6/0.9	–	IE2

MODEL	A	B	F		G	H1	H2	L	M1	M2	N1	N2	S1	X	Ø (mm) Mech. seal	DNA	DNM	PACKING DIMENSIONS			VOLUME (m^3)	WEIGHT kg	
			IE2	IE3														L/A	L/B	H		IE2	IE3
NKM-G 32-125.1/140/0.25/4	80	50	208	–	234	112	140	201	100	70	190	140	M10	100	28	50	32	620	370	480	0.110	33	–

NKM-G 32-125- STANDARDISED MONOBLOC CENTRIFUGAL ELECTRIC PUMPS FOR AIR CONDITIONING, REFRIGERATION, IRRIGATION, DECANTING, PRESSURISATION SYSTEMS, AND INDUSTRIAL APPLICATIONS

Pumped liquid temperature range: from -10 °C to +140 °C - **Maximum ambient temperature:** +40°C

≅ 1450 1/min

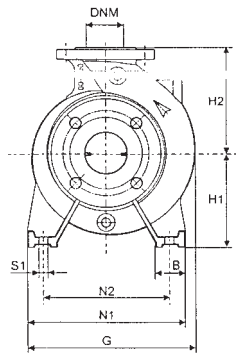

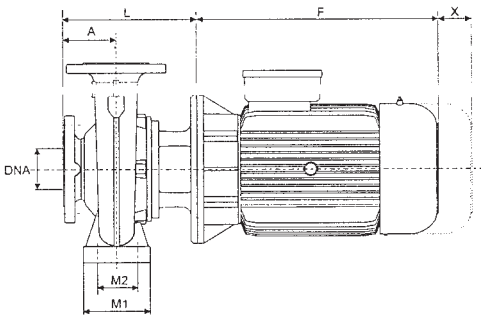

Construction features of the motor: B5

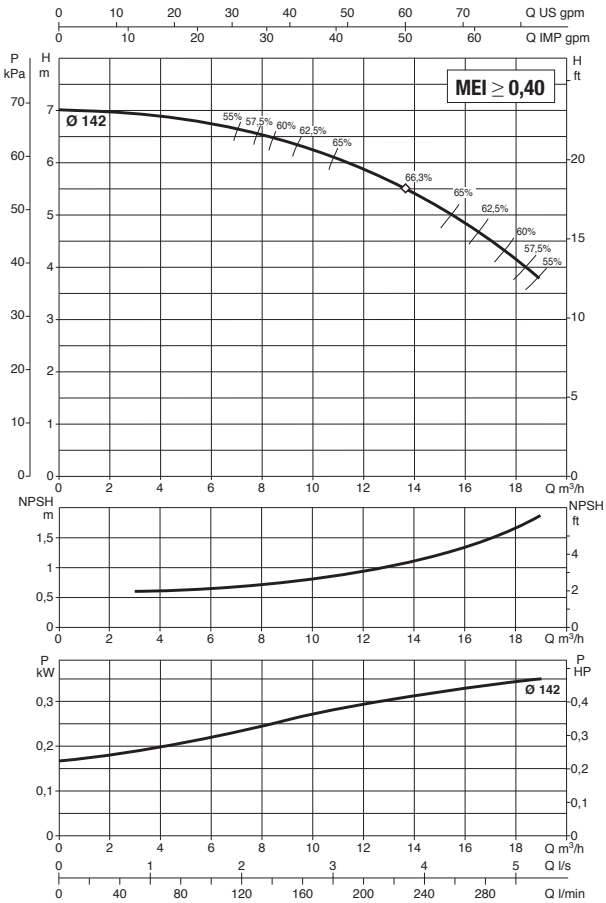

See hydraulic efficiency details on page 291.

The performance curves are based on kinematic viscosity values = 1 mm²/s and density equal to 1000 kg/m³. Curve tolerance according to ISO 9906.

MODEL	ELECTRICAL DATA						
	MOTOR SIZE	POWER INPUT 50 Hz	P2 NOMINAL		In A		MOTOR TYPE
			kW	HP	IE2	IE3	
NKM-G 32-125/142/ 0.37/4	MEC 71	230 - 400 V ~	0.37	0.5	1.7/0.98	–	IE2

MODEL	A	B	F		G	H1	H2	L	M1	M2	N1	N2	S1	X	Ø (mm) Mech. seal	DNA	DNM	PACKING DIMENSIONS			VOLUME (m^3)	WEIGHT kg	
			IE2	IE3														L/A	L/B	H		IE2	IE3
NKM-G 32-125/142/ 0.37/4	80	50	208	–	234	112	140	201	100	70	190	140	M10	100	28	50	32	620	370	480	0.110	35	–

NKM-G 32-160.1- STANDARDISED MONOBLOC CENTRIFUGAL ELECTRIC PUMPS FOR AIR CONDITIONING, REFRIGERATION, IRRIGATION, DECANTING, PRESSURISATION SYSTEMS, AND INDUSTRIAL APPLICATIONS

Pumped liquid temperature range: from -10 °C to +140 °C - **Maximum ambient temperature:** +40°C

≅ 1450 1/min

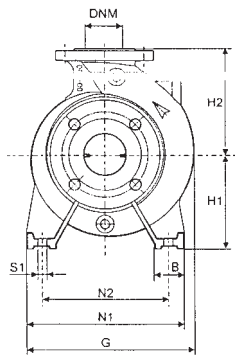

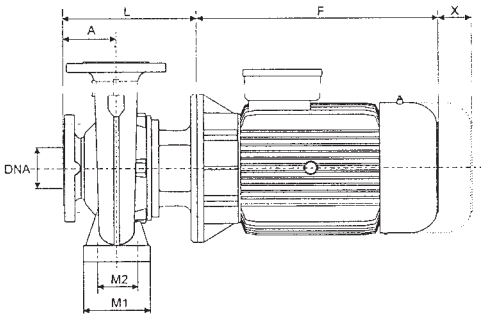

Construction features of the motor: B5

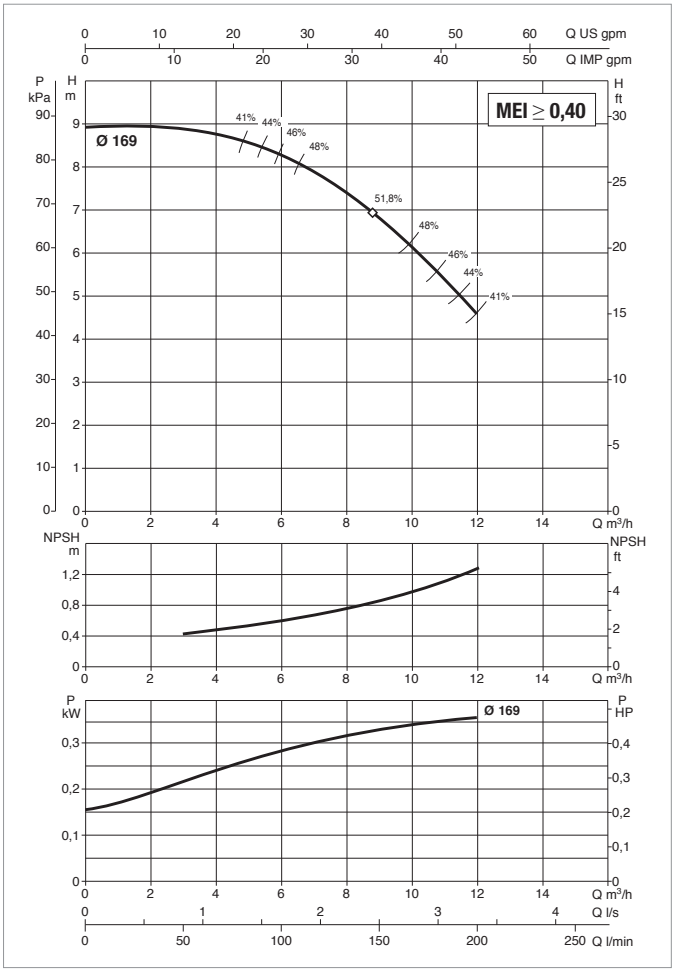

See hydraulic efficiency details on page 291.

The performance curves are based on kinematic viscosity values = 1 mm²/s and density equal to 1000 kg/m³. Curve tolerance according to ISO 9906.

MODEL	ELECTRICAL DATA						
	MOTOR SIZE	POWER INPUT 50 Hz	P2 NOMINAL		In A		TYPE MOTOR
			kW	HP	IE2	IE3	
NKM-G 32-160.1/169/0.37/4	MEC 71	230 - 400 V ~	0.37	0.5	1.7/0.98	–	IE2

MODEL	A	B	F		G	H1	H2	L	M1	M2	N1	N2	S1	X	Ø (mm) Mech. seal	DNA	DNM	PACKING DIMENSIONS			VOLUME (m^3)	WEIGHT kg	
			IE2	IE3														L/A	L/B	H		IE2	IE3
NKM-G 32-160.1/169/0.37/4	80	50	208	–	245	132	160	201	100	70	240	190	M10	100	28	50	32	620	370	480	0.110	36	–

NKM-G 32-160- STANDARDISED MONOBLOC CENTRIFUGAL ELECTRIC PUMPS FOR AIR CONDITIONING, REFRIGERATION, IRRIGATION, DECANTING, PRESSURISATION SYSTEMS, AND INDUSTRIAL APPLICATIONS

Pumped liquid temperature range: from -10 °C to +140 °C - **Maximum ambient temperature:** +40°C

≅ 1450 1/min

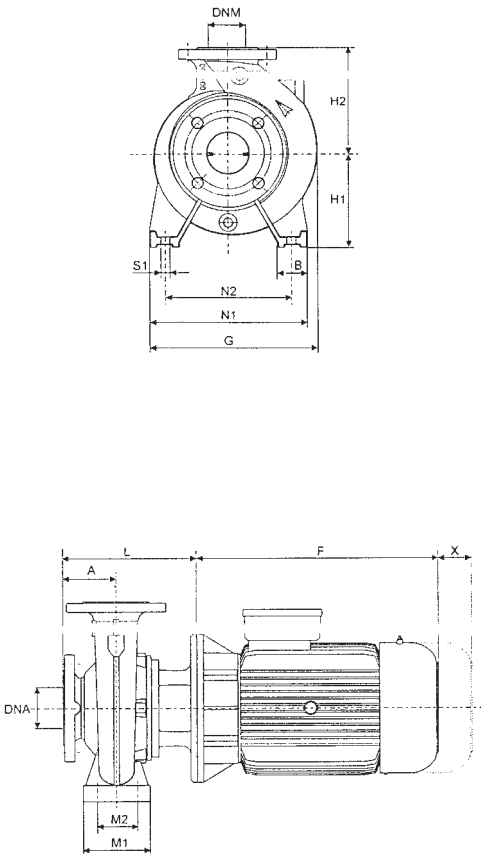

Construction features of the motor: B5

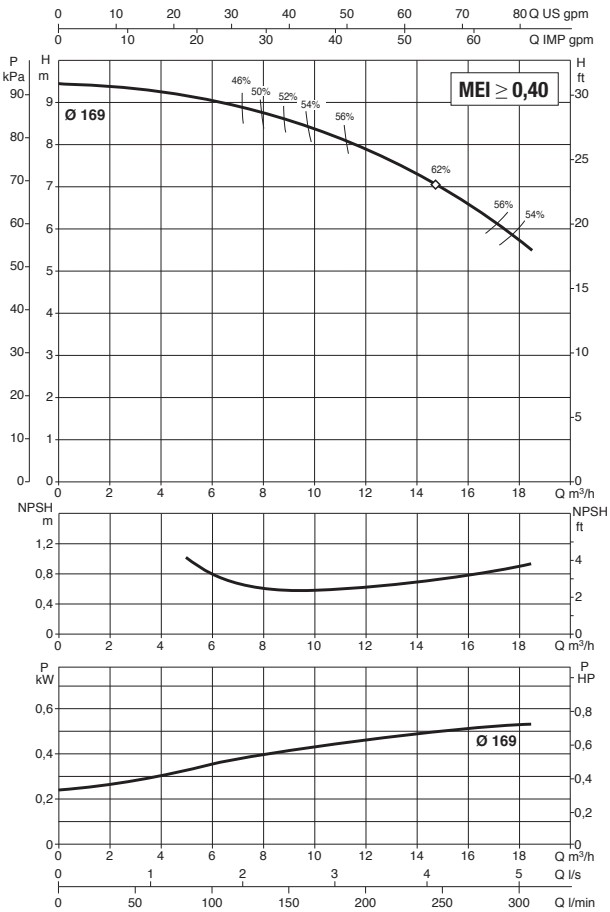

See hydraulic efficiency details on page 291.

The performance curves are based on kinematic viscosity values = 1 mm²/s and density equal to 1000 kg/m³. Curve tolerance according to ISO 9906.

MODEL	ELECTRICAL DATA						
	MOTOR SIZE	POWER INPUT 50 Hz	P2 NOMINAL		In A		MOTOR TYPE
			kW	HP	IE2	IE3	
NKM-G 32-160/169/0.55/4	MEC 80	230/400 V	0.55	0.75	2.6/1.5	–	IE2

MODEL	A	B	F		G	H1	H2	L	M1	M2	N1	N2	S1	X	Ø (mm) Mech. seal	DNA	DNM	PACKING DIMENSIONS			VOLUME (m³)	WEIGHT kg	
			IE2	IE3														L/A	L/B	H		IE2	IE3
NKM-G 32-160/169/0.55/4	80	50	234	–	245	132	160	226	100	70	240	190	M10	100	28	50	32	620	370	480	0.110	42	–

NKM-G 32-200.1- STANDARDISED MONOBLOC CENTRIFUGAL ELECTRIC PUMPS FOR AIR CONDITIONING, REFRIGERATION, IRRIGATION, DECANTING, PRESSURISATION SYSTEMS, AND INDUSTRIAL APPLICATIONS

Pumped liquid temperature range: from -10 °C to +140 °C - **Maximum ambient temperature:** +40°C

≅ 1450 1/min

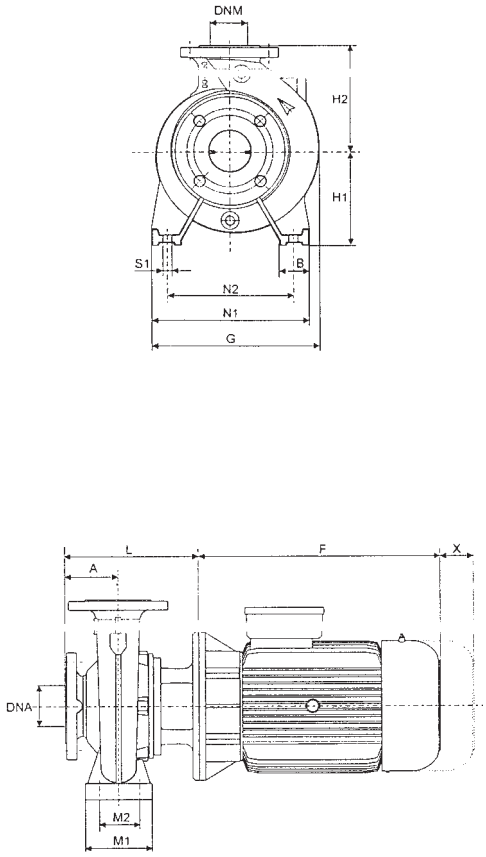

Construction features of the motor: B5

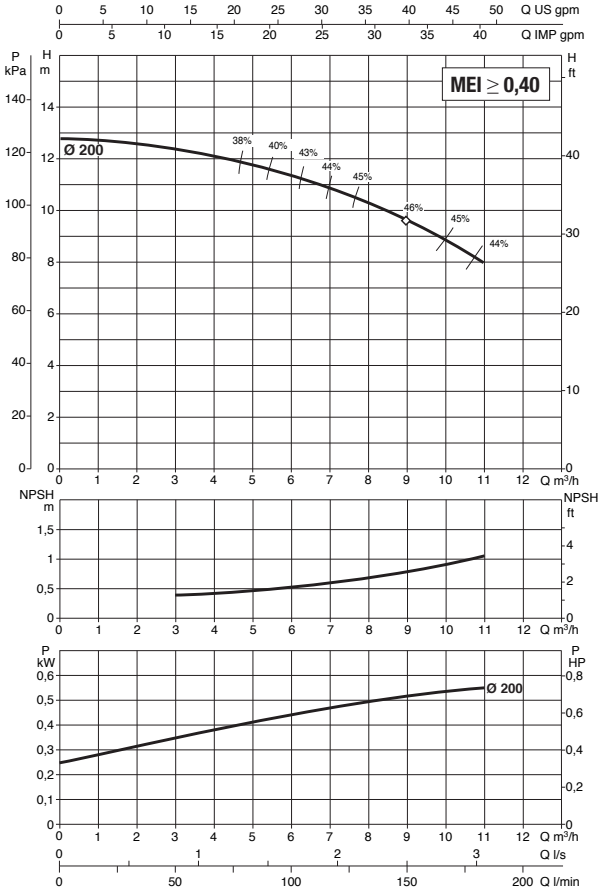

See hydraulic efficiency details on page 291.

The performance curves are based on kinematic viscosity values = 1 mm²/s and density equal to 1000 kg/m³. Curve tolerance according to ISO 9906.

MODEL	ELECTRICAL DATA						
	MOTOR SIZE	POWER INPUT 50 Hz	P2 NOMINAL		In A		MOTOR TYPE
			kW	HP	IE2	IE3	
NKM-G 32-200.1/200/0.55/4	MEC 80	230/400 V	0.55	0.75	2.6/1.5	–	IE2

MODEL	A	B	F		G	H1	H2	L	M1	M2	N1	N2	S1	X	Ø (mm) Mech. seal	DNA	DNM	PACKING DIMENSIONS			VOLUME (m^3)	WEIGHT kg	
			IE2	IE3														L/A	L/B	H		IE2	IE3
NKM-G 32-200.1/200/0.55/4	80	50	234	–	279	160	180	226	100	70	240	190	M10	100	28	50	32	620	370	480	0.110	51	–

NKM-G 32-200- STANDARDISED MONOBLOC CENTRIFUGAL ELECTRIC PUMPS FOR AIR CONDITIONING, REFRIGERATION, IRRIGATION, DECANTING, PRESSURISATION SYSTEMS, AND INDUSTRIAL APPLICATIONS

Pumped liquid temperature range: from -10 °C to +140 °C - **Maximum ambient temperature:** +40°C

≅ 1450 1/min

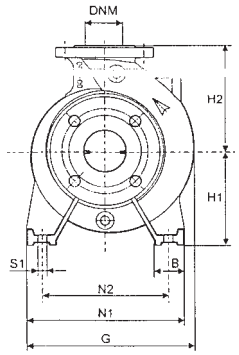

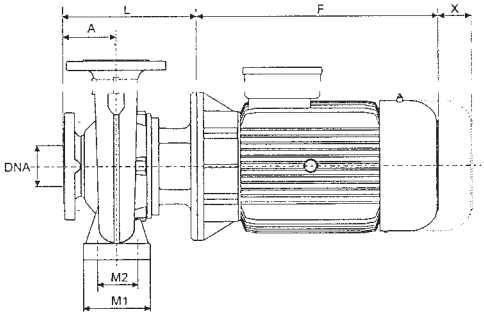

Construction features of the motor: B5

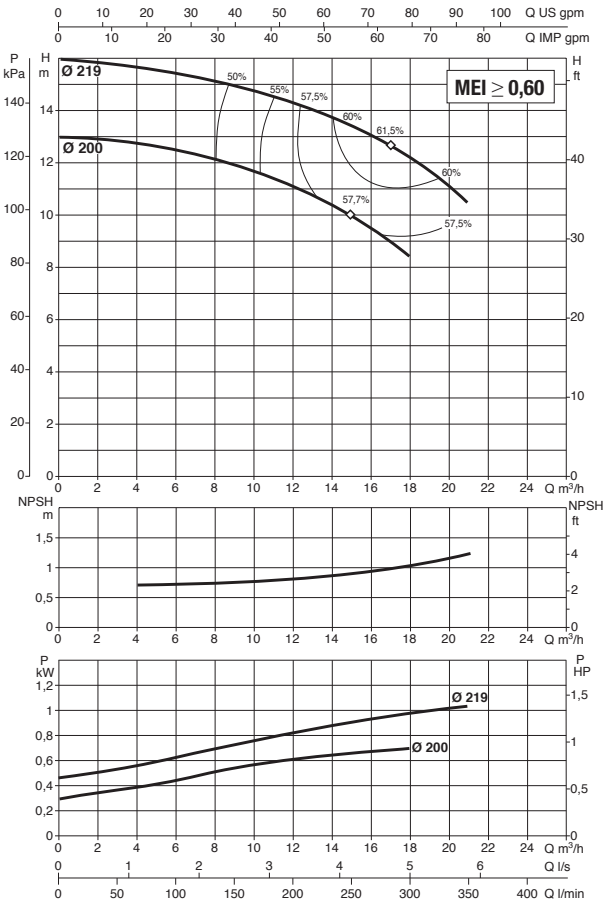

See hydraulic efficiency details on page 291.

The performance curves are based on kinematic viscosity values = 1 mm²/s and density equal to 1000 kg/m³. Curve tolerance according to ISO 9906.

MODEL	ELECTRICAL DATA						
	MOTOR SIZE	POWER INPUT 50 Hz	P2 NOMINAL		In A		MOTOR TYPE
			kW	HP	IE2	IE3	
NKM-G 32-200/200/ 0,75/4	MEC 80	230/400 V	0.75	1	3.57/2.06	–	IE2
NKM-G 32-200/219/ 1,1 /4	MEC 90 S	230/400 V	1.1	1.5	4.68/2.7	–	IE2

MODEL	A	B	F		G	H1	H2	L	M1	M2	N1	N2	S1	X	Ø (mm) Mech. seal	DNA	DNM	PACKING DIMENSIONS			VOLUME (m³)	WEIGHT kg	
			IE2	IE3														L/A	L/B	H		IE2	IE3
NKM-G 32-200/200/ 0,75/4	80	50	234	–	279	160	180	226	100	70	240	190	M10	100	28	50	32	620	370	480	0.110	56	–
NKM-G 32-200/219/ 1,1 /4	80	50	247	–	279	160	180	226	100	70	240	190	M10	100	28	50	32	620	370	480	0.110	62	–

NKM-G 40-125- STANDARDISED MONOBLOC CENTRIFUGAL ELECTRIC PUMPS FOR AIR CONDITIONING, REFRIGERATION, IRRIGATION, DECANTING, PRESSURISATION SYSTEMS, AND INDUSTRIAL APPLICATIONS

Pumped liquid temperature range: from -10 °C to +140 °C - **Maximum ambient temperature:** +40°C

≅ 1450 1/min

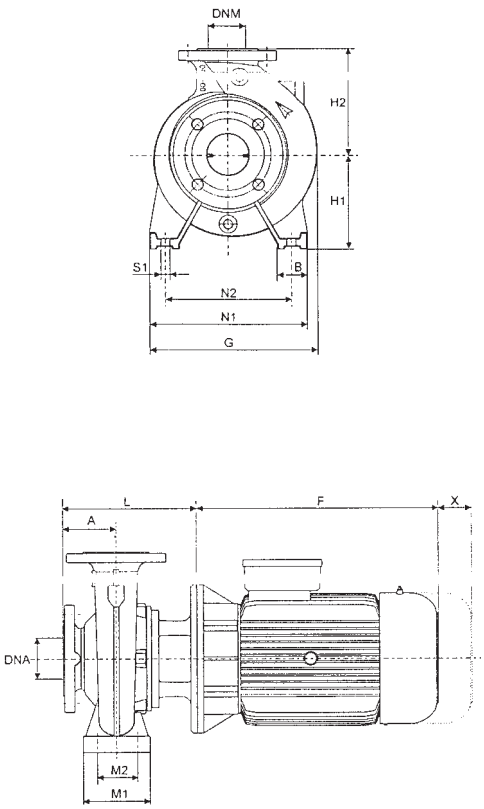

Construction features of the motor: B5

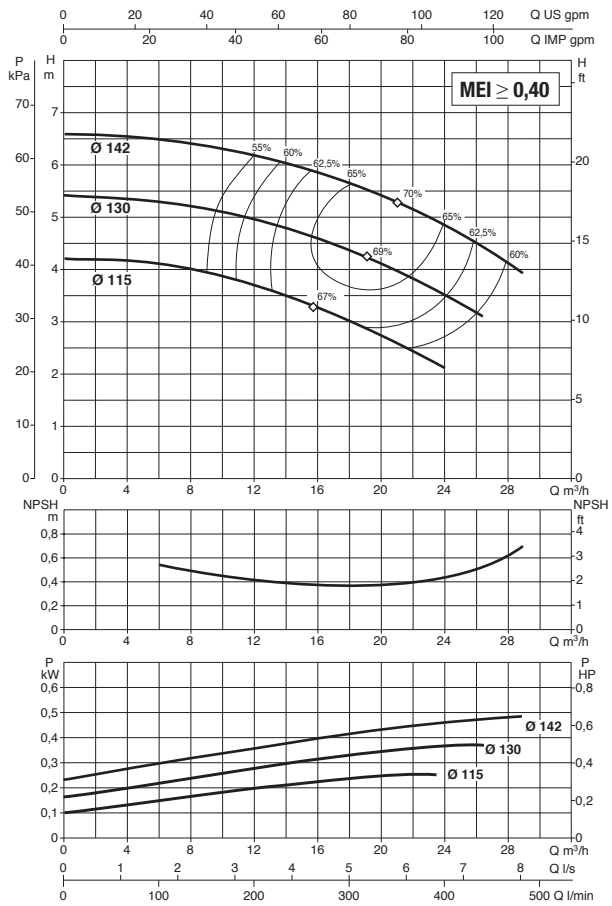

See hydraulic efficiency details on page 291.

The performance curves are based on kinematic viscosity values = 1 mm²/s and density equal to 1000 kg/m³. Curve tolerance according to ISO 9906.

MODEL	ELECTRICAL DATA						
	MOTOR SIZE	POWER INPUT 50 Hz	P2 NOMINAL		In A		MOTOR TYPE
			kW	HP	IE2	IE3	
NKM-G 40-125/115/ 0.25/4	MEC 71	230/400 V	0.25	0.33	1.6/0.11	–	IE2
NKM-G 40-125/130/ 0.37/4	MEC 71	230/400 V	0.37	0.5	1.7/0.98	–	IE2
NKM-G 40-125/142/ 0.55/4	MEC 80	230/400 V	0.55	0.75	2.6/1.5	–	IE2

MODEL	A	B	F		G	H1	H2	L	M1	M2	N1	N2	S1	X	Ø (mm) Mech. seal	DNA	DNM	PACKING DIMENSIONS			VOLUME (m^3)	WEIGHT kg	
			IE2	IE3														L/A	L/B	H		IE2	IE3
NKM-G 40-125/115/ 0.25/4	80	50	208	–	235	112	140	201	100	70	210	160	M10	100	28	65	40	620	370	480	0.110	37	–
NKM-G 40-125/130/ 0.37/4	80	50	208	–	235	112	140	201	100	70	210	160	M10	100	28	65	40	620	370	480	0.110	40	–
NKM-G 40-125/142/ 0.55/4	80	50	234	–	235	112	140	201	100	70	210	160	M10	100	28	65	40	620	370	480	0.110	47	–

DAB PUMPS reserves the right to make modifications without notice.

NKM-G 40-160- STANDARDISED MONOBLOC CENTRIFUGAL ELECTRIC PUMPS FOR AIR CONDITIONING, REFRIGERATION, IRRIGATION, DECANTING, PRESSURISATION SYSTEMS, AND INDUSTRIAL APPLICATIONS

Pumped liquid temperature range: from -10 °C to +140 °C - **Maximum ambient temperature:** +40°C

≅ 1450 1/min

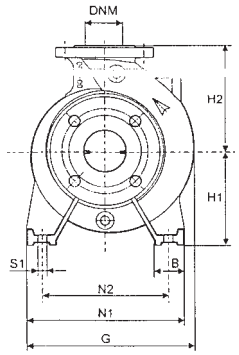

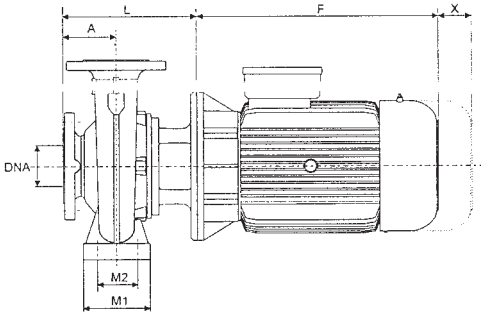

Construction features of the motor: B5

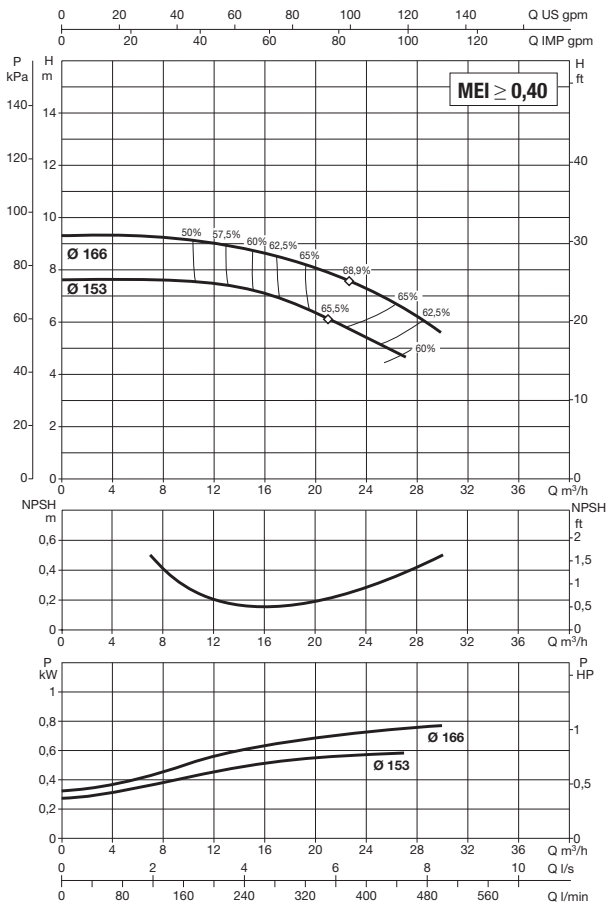

See hydraulic efficiency details on page 291.

The performance curves are based on kinematic viscosity values = 1 mm²/s and density equal to 1000 kg/m³. Curve tolerance according to ISO 9906.

MODEL	ELECTRICAL DATA						
	MOTOR SIZE	POWER INPUT 50 Hz	P2 NOMINAL		In A		MOTOR TYPE
			kW	HP	IE2	IE3	
NKM-G 40-160/153/ 0.55/4	MEC 80	230/400 V	0.55	0.75	2.6/1.5	–	IE2
NKM-G 40-160/166/ 0.75/4	MEC 80	230/400 V	0.75	1	3.57/2.06	–	IE2

MODEL	A	B	F		G	H1	H2	L	M1	M2	N1	N2	S1	X	Ø (mm) Mech. seal	DNA	DNM	PACKING DIMENSIONS			VOLUME (m^3)	WEIGHT kg	
			IE2	IE3														L/A	L/B	H		IE2	IE3
NKM-G 40-160/153/ 0.55/4	80	50	234	–	253	132	160	226	100	70	240	190	M10	100	28	65	40	620	370	480	0.110	48	–
NKM-G 40-160/166/ 0.75/4	80	50	234	–	253	132	160	226	100	70	240	190	M10	100	28	65	40	620	370	480	0.110	50	–

NKM-G 40-200- STANDARDISED MONOBLOC CENTRIFUGAL ELECTRIC PUMPS FOR AIR CONDITIONING, REFRIGERATION, IRRIGATION, DECANTING, PRESSURISATION SYSTEMS, AND INDUSTRIAL APPLICATIONS

Pumped liquid temperature range: from -10 °C to +140 °C - **Maximum ambient temperature:** +40°C

≅ 1450 1/min

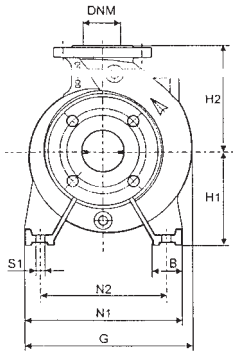

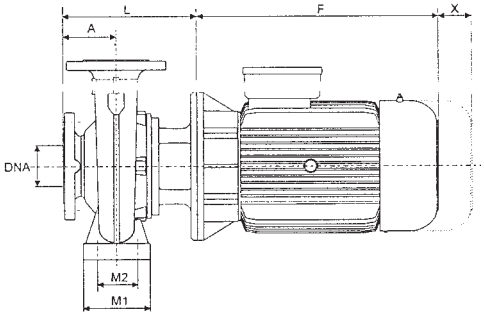

Construction features of the motor: B5

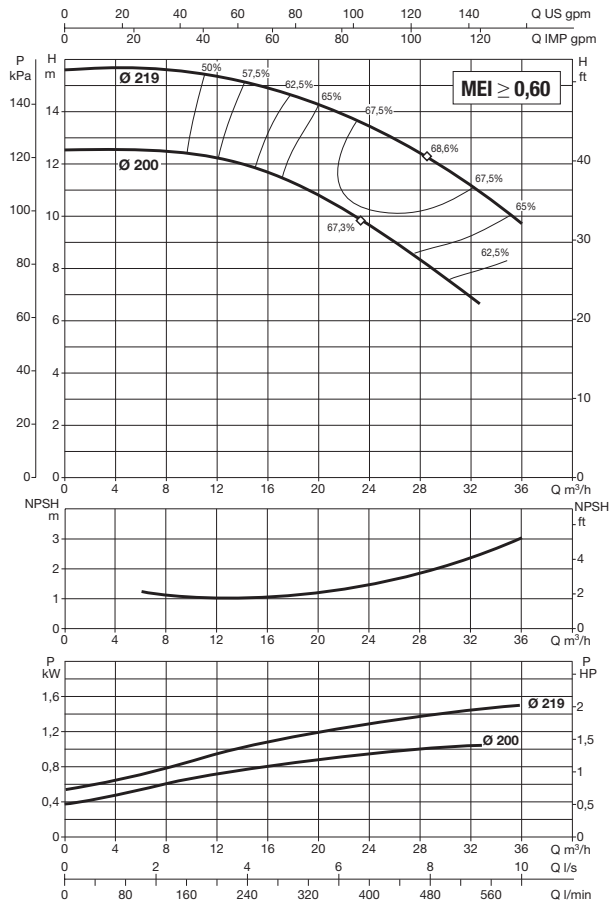

See hydraulic efficiency details on page 291.

The performance curves are based on kinematic viscosity values = 1 mm²/s and density equal to 1000 kg/m³. Curve tolerance according to ISO 9906.

MODEL	ELECTRICAL DATA						
	MOTOR SIZE	POWER INPUT 50 Hz	P2 NOMINAL		In A		MOTOR TYPE
			kW	HP	IE2	IE3	
NKM-G 40-200/200/ 1,1 /4	MEC 90 S	230/400 V	1.1	1.5	4.68/2.7	–	IE2
NKM-G 40-200/219/ 1,5 /4	MEC 90 L	230/400 V	1.5	2	6.24/3.6	–	IE2

MODEL	A	B	F		G	H1	H2	L	M1	M2	N1	N2	S1	X	Ø (mm) Mech. seal	DNA	DNM	PACKING DIMENSIONS			VOLUME (m^3)	WEIGHT kg	
			IE2	IE3														L/A	L/B	H		IE2	IE3
NKM-G 40-200/200/ 1,1 /4	100	50	247	–	296	160	180	246	100	70	265	212	M10	100	28	65	40	620	370	480	0.110	64	–
NKM-G 40-200/219/ 1,5 /4	100	50	272	–	296	160	180	246	100	70	265	212	M10	100	28	65	40	620	370	480	0.110	66	–

DAB PUMPS reserves the right to make modifications without notice.

NKM-G 40-250- STANDARDISED MONOBLOC CENTRIFUGAL ELECTRIC PUMPS FOR AIR CONDITIONING, REFRIGERATION, IRRIGATION, DECANTING, PRESSURISATION SYSTEMS, AND INDUSTRIAL APPLICATIONS

Pumped liquid temperature range: from -10 °C to +140 °C - **Maximum ambient temperature:** +40°C

≅ 1450 1/min

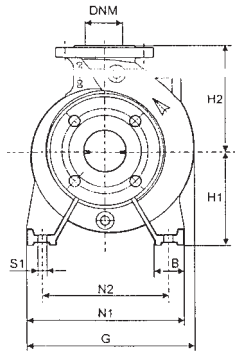

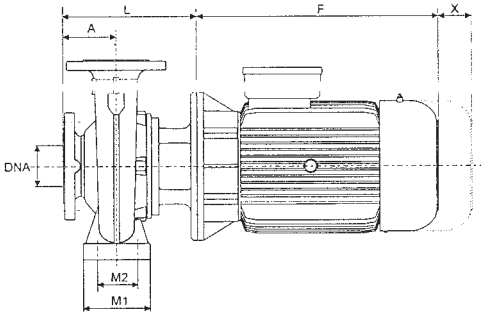

Construction features of the motor: B5

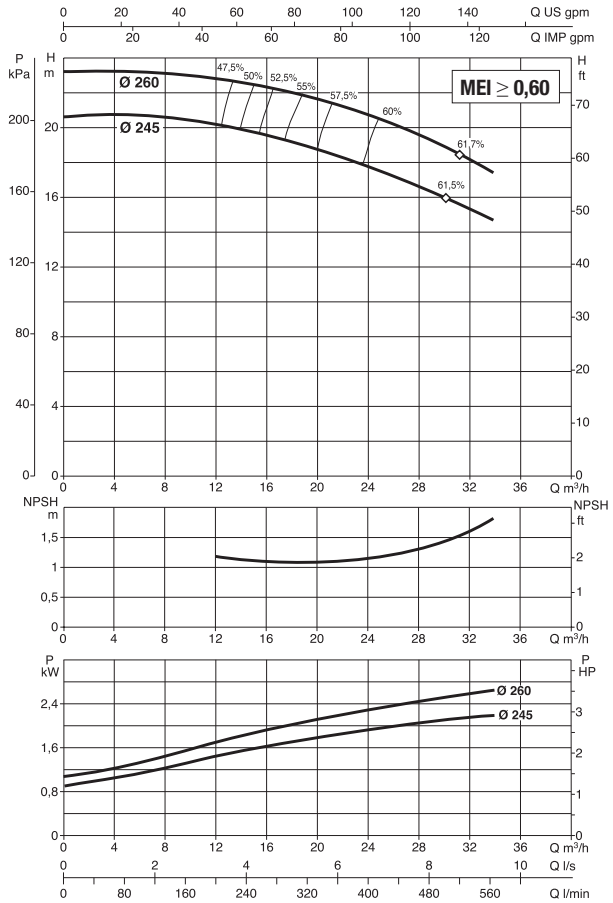

See hydraulic efficiency details on page 291.

The performance curves are based on kinematic viscosity values = 1 mm²/s and density equal to 1000 kg/m³. Curve tolerance according to ISO 9906.

MODEL	ELECTRICAL DATA						
	MOTOR SIZE	POWER INPUT 50 Hz	P2 NOMINAL		In A		MOTOR TYPE
			kW	HP	IE2	IE3	
NKM-G 40-250/245/ 2,2 /4	MEC 100 L	230/400 V	2.2	3	8.75/5.05	–	IE2
NKM-G 40-250/260/ 3 /4	MEC 100 L	400 V Δ	3	4	6.25	–	IE2

MODEL	A	B	F		G	H1	H2	L	M1	M2	N1	N2	S1	X	Ø (mm) Mech. seal	DNA	DNM	PACKING DIMENSIONS			VOLUME (m^3)	WEIGHT kg	
			IE2	IE3														L/A	L/B	H		IE2	IE3
NKM-G 40-250/245/ 2,2 /4	100	65	301	–	336	180	225	274	125	95	320	250	M10	100	28	65	40	670	420	540	0.152	85	–
NKM-G 40-250/260/ 3 /4	100	65	301	–	336	180	225	274	125	95	320	250	M10	100	28	65	40	670	420	540	0.152	89	–

DAB PUMPS reserves the right to make modifications without notice.

NKM-G 50-125- STANDARDISED MONOBLOC CENTRIFUGAL ELECTRIC PUMPS FOR AIR CONDITIONING, REFRIGERATION, IRRIGATION, DECANTING, PRESSURISATION SYSTEMS, AND INDUSTRIAL APPLICATIONS

Pumped liquid temperature range: from -10 °C to +140 °C - **Maximum ambient temperature:** +40°C

≅ 1450 1/min

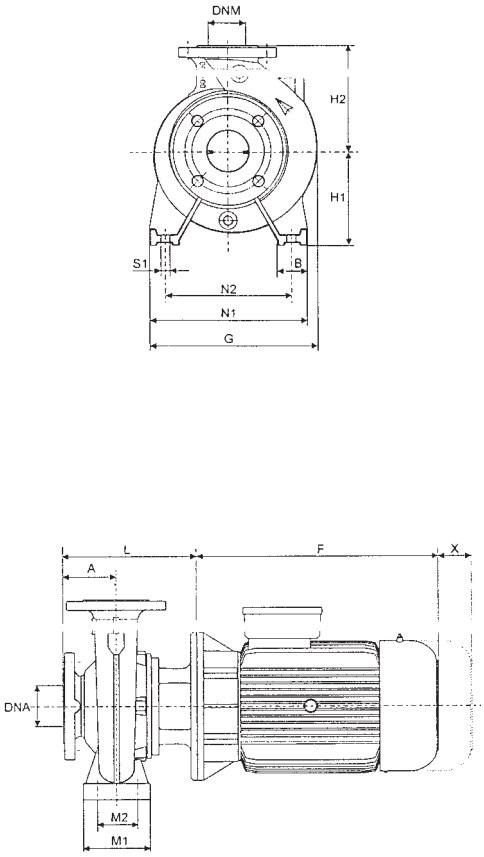

Construction features of the motor: B5

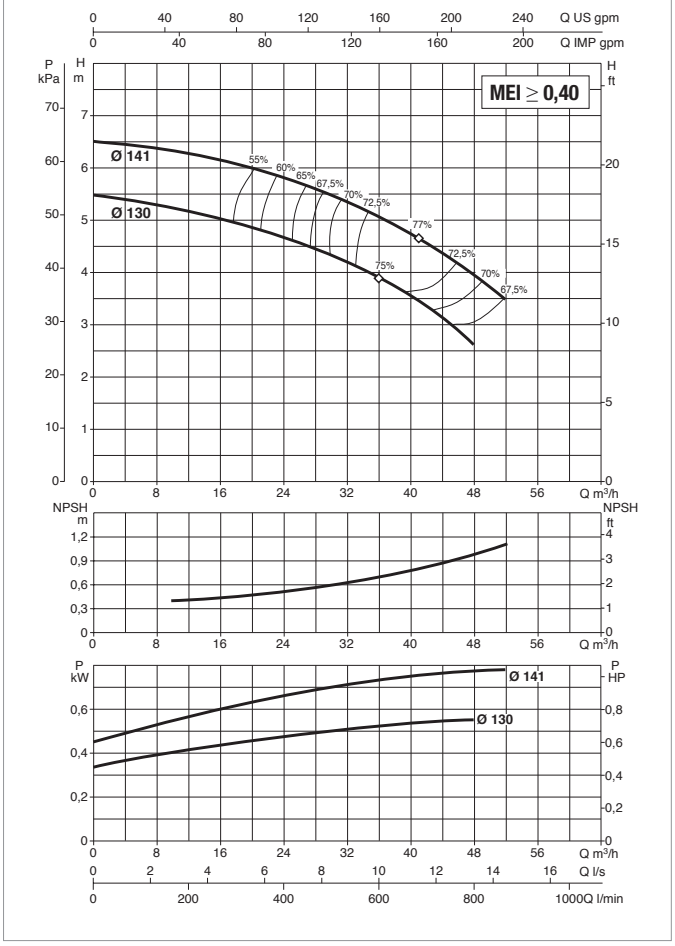

See hydraulic efficiency details on page 291.

The performance curves are based on kinematic viscosity values = 1 mm²/s and density equal to 1000 kg/m³. Curve tolerance according to ISO 9906.

MODEL	ELECTRICAL DATA						
	MOTOR SIZE	POWER INPUT 50 Hz	P2 NOMINAL		In A		MOTOR TYPE
			kW	HP	IE2	IE3	
NKM-G 50-125/130/ 0.55/4	MEC 71	230/400 V	0.55	0.75	2.6/1.5	–	IE2
NKM-G 50-125/141/ 0.75/4	MEC 80	230/400 V	0.75	1	3.57/2.06	–	IE2

MODEL	A	B	F		G	H1	H2	L	M1	M2	N1	N2	S1	X	Ø (mm) Mech. seal	DNA	DNM	PACKING DIMENSIONS			VOLUME (m³)	WEIGHT kg	
			IE2	IE3														L/A	L/B	H		IE2	IE3
NKM-G 50-125/130/ 0.55/4	100	50	234	–	250	132	160	246	100	70	240	190	M10	100	28	65	50	620	370	480	0.110	45	–
NKM-G 50-125/141/ 0.75/4	100	50	234	–	250	132	160	246	100	70	240	190	M10	100	28	65	50	620	370	480	0.110	51	–

NKM-G 50-160- STANDARDISED MONOBLOC CENTRIFUGAL ELECTRIC PUMPS FOR AIR CONDITIONING, REFRIGERATION, IRRIGATION, DECANTING, PRESSURISATION SYSTEMS, AND INDUSTRIAL APPLICATIONS

Pumped liquid temperature range: from -10 °C to +140 °C - **Maximum ambient temperature:** +40°C

≅ 1450 1/min

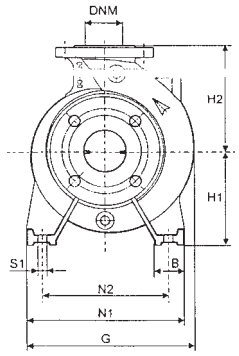

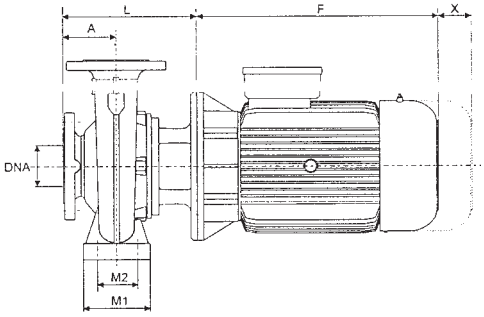

Construction features of the motor: B5

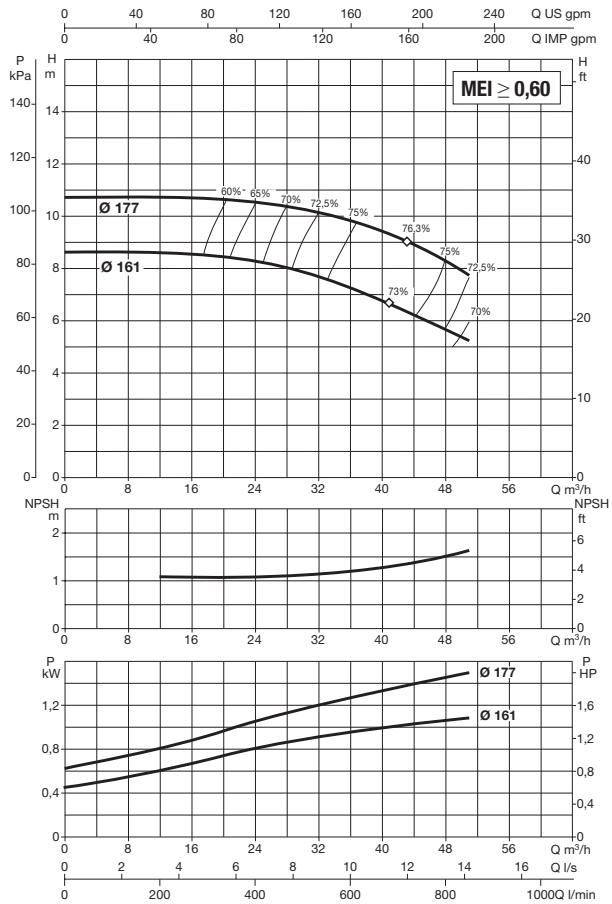

See hydraulic efficiency details on page 291.

The performance curves are based on kinematic viscosity values = 1 mm²/s and density equal to 1000 kg/m³. Curve tolerance according to ISO 9906.

MODEL	ELECTRICAL DATA						
	MOTOR SIZE	POWER INPUT 50 Hz	P2 NOMINAL		In A		MOTOR TYPE
			kW	HP	IE2	IE3	
NKM-G 50-160/161/ 1.1 /4	MEC 90 S	230/400 V	1.1	1.5	4.68/2.7	–	IE2
NKM-G 50-160/177/ 1,5 /4	MEC 90 L	230/400 V	1.5	2	6.24/3.6	–	IE2

MODEL	A	B	F		G	H1	H2	L	M1	M2	N1	N2	S1	X	Ø (mm) Mech. seal	DNA	DNM	PACKING DIMENSIONS			VOLUME (m^3)	WEIGHT kg	
			IE2	IE3														L/A	L/B	H		IE2	IE3
NKM-G 50-160/161/ 1.1 /4	100	50	247	–	282	160	180	274	100	70	265	212	M10	100	28	65	50	620	370	480	0.110	58	–
NKM-G 50-160/177/ 1,5 /4	100	50	272	–	282	160	180	274	100	70	265	212	M10	100	28	65	50	620	370	480	0.110	60	–

NKM-G 50-200- STANDARDISED MONOBLOC CENTRIFUGAL ELECTRIC PUMPS FOR AIR CONDITIONING, REFRIGERATION, IRRIGATION, DECANTING, PRESSURISATION SYSTEMS, AND INDUSTRIAL APPLICATIONS

Pumped liquid temperature range: from -10 °C to +140 °C - **Maximum ambient temperature:** +40°C

≅ 1450 1/min

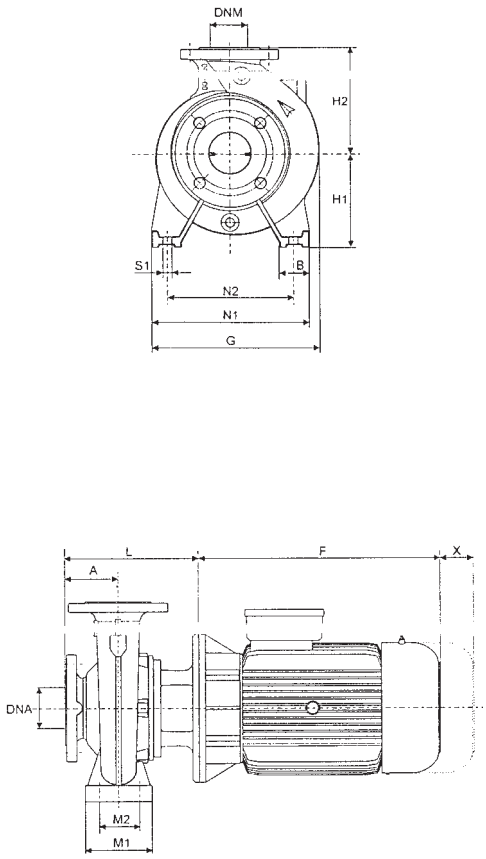

Construction features of the motor: B5

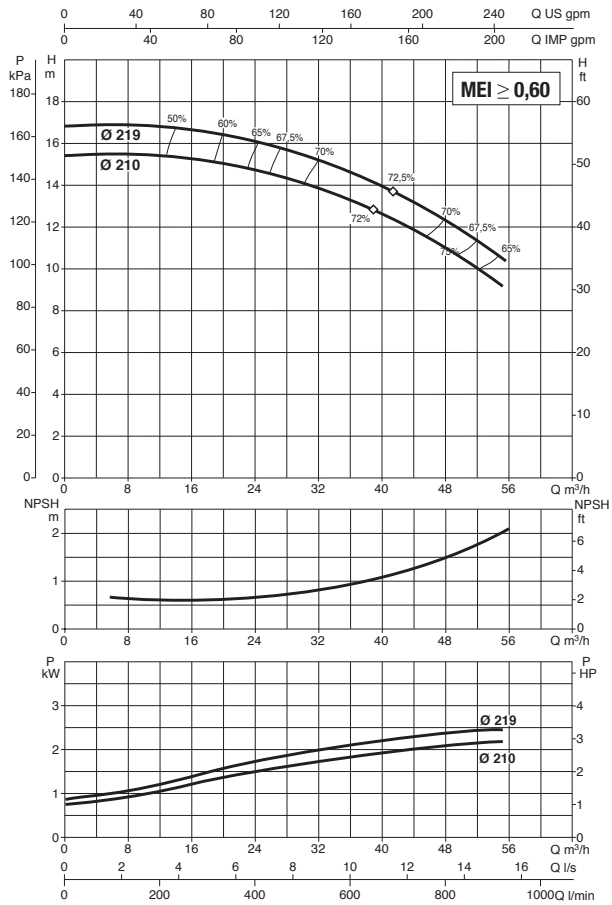

See hydraulic efficiency details on page 291.

The performance curves are based on kinematic viscosity values = 1 mm²/s and density equal to 1000 kg/m³. Curve tolerance according to ISO 9906.

MODEL	ELECTRICAL DATA						
	MOTOR SIZE	POWER INPUT 50 Hz	P2 NOMINAL		In A		MOTOR TYPE
			kW	HP	IE2	IE3	
NKM-G 50-200/210/ 2,2 /4	MEC 100 L	230/400 V	2.2	3	8.75/5.05	–	IE2
NKM-G 50-200/219/ 3 /4	MEC 100 L	400 V Δ	3	4	6.25	–	IE2

MODEL	A	B	F		G	H1	H2	L	M1	M2	N1	N2	S1	X	Ø (mm) Mech. seal	DNA	DNM	PACKING DIMENSIONS			VOLUME (m^3)	WEIGHT kg	
			IE2	IE3														L/A	L/B	H		IE2	IE3
NKM-G 50-200/210/ 2,2 /4	100	50	301	–	302	160	200	274	100	70	265	212	M10	100	28	65	50	670	420	540	0.152	79	–
NKM-G 50-200/219/ 3 /4	100	50	301	–	302	160	200	274	100	70	265	212	M10	100	28	65	50	670	420	540	0.152	81	–

NKM-G 50-250- STANDARDISED MONOBLOC CENTRIFUGAL ELECTRIC PUMPS FOR AIR CONDITIONING, REFRIGERATION, IRRIGATION, DECANTING, PRESSURISATION SYSTEMS, AND INDUSTRIAL APPLICATIONS

Pumped liquid temperature range: from -10 °C to +140 °C - **Maximum ambient temperature:** +40°C

≅ 1450 1/min

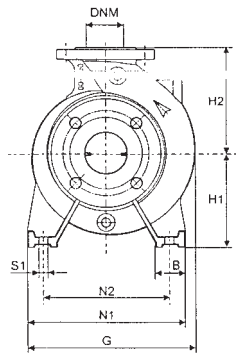

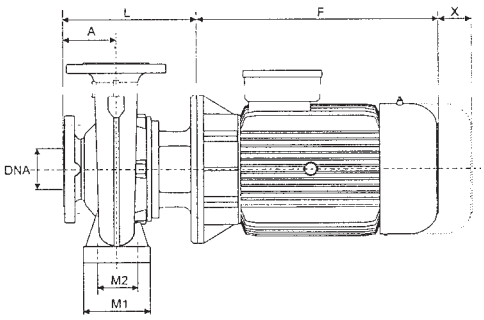

Construction features of the motor: B5

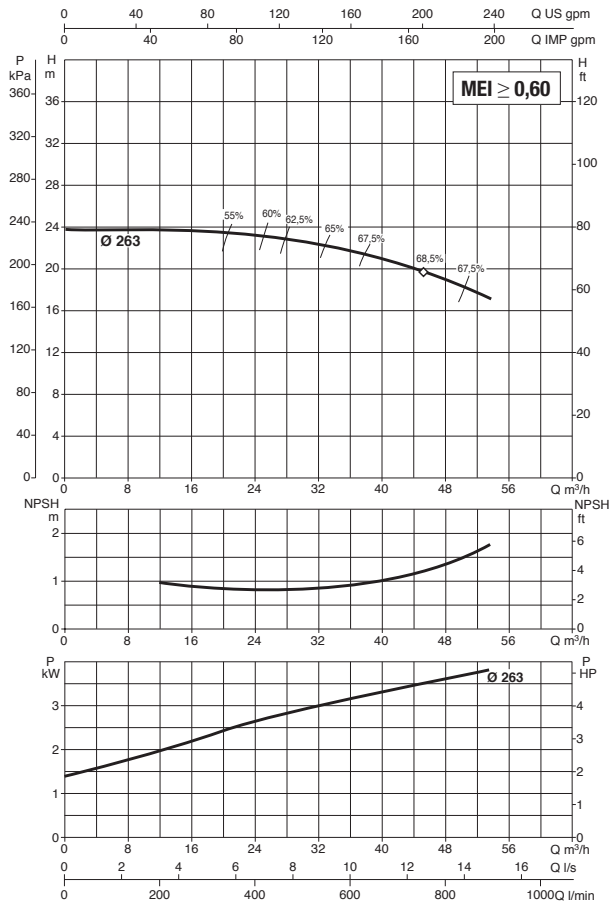

See hydraulic efficiency details on page 291.

The performance curves are based on kinematic viscosity values = 1 mm²/s and density equal to 1000 kg/m³. Curve tolerance according to ISO 9906.

MODEL	ELECTRICAL DATA						
	MOTOR SIZE	POWER INPUT 50 Hz	P2 NOMINAL		In A		MOTOR TYPE
			kW	HP	IE2	IE3	
NKM-G 50-250/263/ 4 /4	MEC 112 M	400 V Δ	4	5.5	7.95	–	IE2

MODEL	A	B	F		G	H1	H2	L	M1	M2	N1	N2	S1	X	Ø (mm) Mech. seal	DNA	DNM	PACKING DIMENSIONS			VOLUME (m³)	WEIGHT kg	
			IE2	IE3														L/A	L/B	H		IE2	IE3
NKM-G 50-250/263/ 4 /4	100	65	301	–	343	180	225	274	125	95	320	250	M10	100	28	65	50	670	420	540	0.152	98	–

NKM-G 65-125- STANDARDISED MONOBLOC CENTRIFUGAL ELECTRIC PUMPS FOR AIR CONDITIONING, REFRIGERATION, IRRIGATION, DECANTING, PRESSURISATION SYSTEMS, AND INDUSTRIAL APPLICATIONS

Pumped liquid temperature range: from -10 °C to +140 °C - **Maximum ambient temperature:** +40°C

≅ 1450 1/min

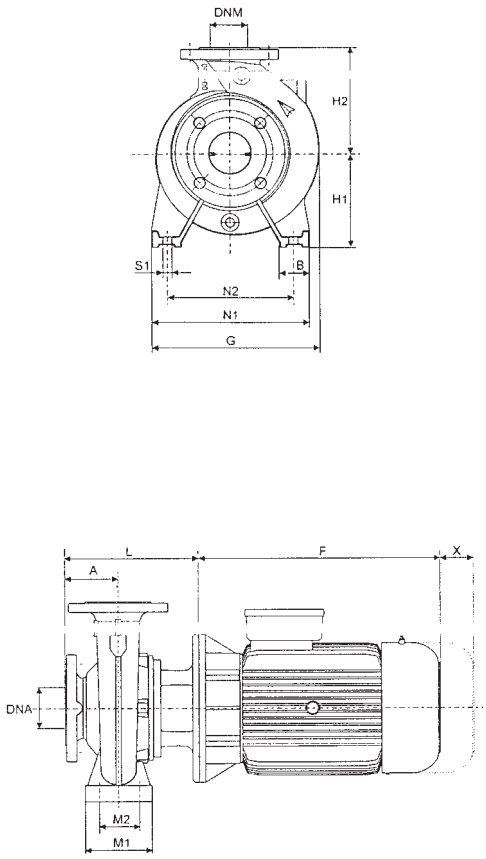

Construction features of the motor: B5

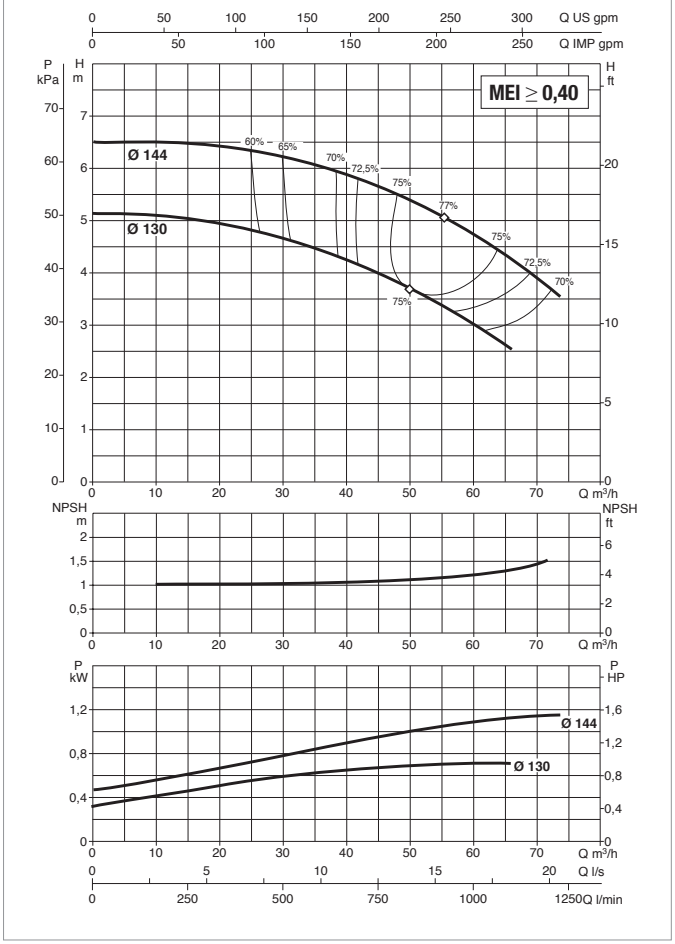

See hydraulic efficiency details on page 291.

The performance curves are based on kinematic viscosity values = 1 mm^2/s and density equal to 1000 kg/m^3. Curve tolerance according to ISO 9906.

MODEL	ELECTRICAL DATA						
	MOTOR SIZE	POWER INPUT 50 Hz	P2 NOMINAL		In A		MOTOR TYPE
			kW	HP	IE2	IE3	
NKM-G 65-125/130/ 0.75/4	MEC 80	230/400 V	0.75	1	3.57/2.06	–	IE2
NKM-G 65-125/144/ 1.1 /4	MEC 90 S	230/400 V	1.1	1.5	4.68/2.7	–	IE2

MODEL	A	B	F		G	H1	H2	L	M1	M2	N1	N2	S1	X	Ø (mm) Mech. seal	DNA	DNM	PACKING DIMENSIONS			VOLUME (m^3)	WEIGHT kg	
			IE2	IE3														L/A	L/B	H		IE2	IE3
NKM-G 65-125/130/ 0.75/4	100	65	234	–	286	160	180	246	125	95	280	212	M10	100	28	80	65	620	370	480	0.110	55	–
NKM-G 65-125/144/ 1.1 /4	100	65	247	–	286	160	180	246	125	95	280	212	M10	100	28	80	65	620	370	480	0.110	61	–

NKM-G 65-160- STANDARDISED MONOBLOC CENTRIFUGAL ELECTRIC PUMPS FOR AIR CONDITIONING, REFRIGERATION, IRRIGATION, DECANTING, PRESSURISATION SYSTEMS, AND INDUSTRIAL APPLICATIONS

Pumped liquid temperature range: from -10 °C to +140 °C - **Maximum ambient temperature:** +40°C

≅ 1450 1/min

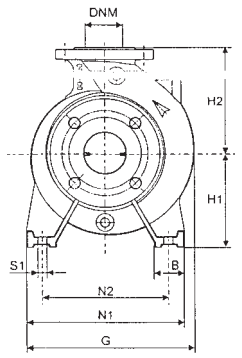

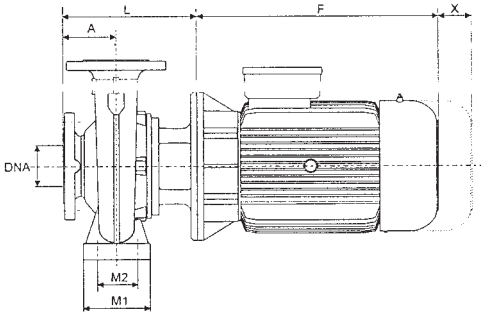

Construction features of the motor: B5

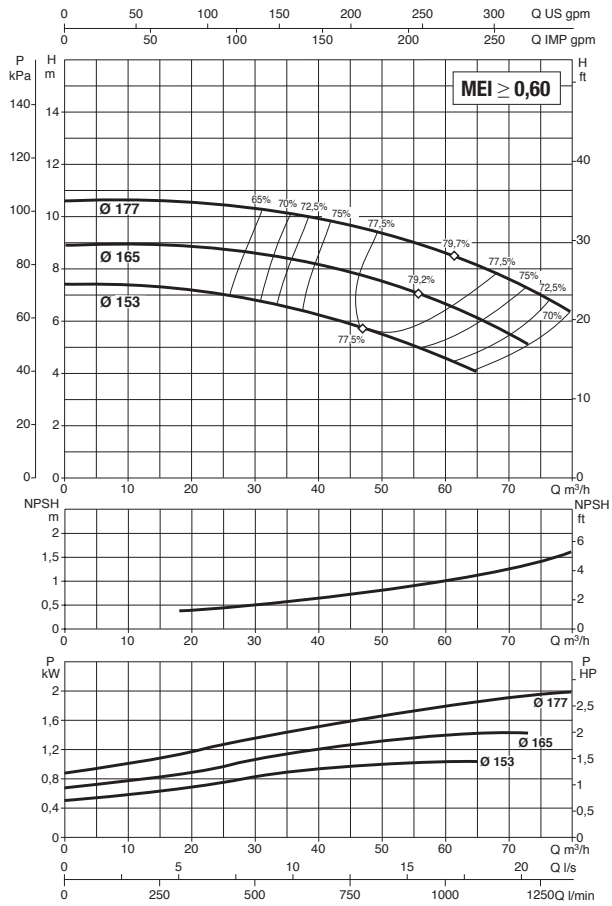

See hydraulic efficiency details on page 291.

The performance curves are based on kinematic viscosity values = 1 mm²/s and density equal to 1000 kg/m³. Curve tolerance according to ISO 9906.

MODEL	ELECTRICAL DATA						
	MOTOR SIZE	POWER INPUT 50 Hz	P2 NOMINAL		In A		MOTOR TYPE
			kW	HP	IE2	IE3	
NKM-G 65-160/153/ 1,1 /4	MEC 90 S	230/400 V	1.1	1.5	4.68/2.7	–	IE2
NKM-G 65-160/165/ 1,5 /4	MEC 90 L	230/400 V	1.5	2	6.24/3.6	–	IE2
NKM-G 65-160/177/ 2,2 /4	MEC 100 L	230/400 V	2.2	3	8.75/5.05	–	IE2

MODEL	A	B	F		G	H1	H2	L	M1	M2	N1	N2	S1	X	Ø (mm) Mech. seal	DNA	DNM	PACKING DIMENSIONS			VOLUME (m^3)	WEIGHT kg	
			IE2	IE3														L/A	L/B	H		IE2	IE3
NKM-G 65-160/153/ 1,1 /4	100	65	247	–	302	160	200	246	125	95	280	212	M10	100	28	80	65	670	420	540	0.152	63	–
NKM-G 65-160/165/ 1,5 /4	100	65	272	–	302	160	200	246	125	95	280	212	M10	100	28	80	65	670	420	540	0.152	64	–
NKM-G 65-160/177/ 2,2 /4	100	65	301	–	302	160	200	274	125	95	280	212	M10	100	28	80	65	670	420	540	0.152	76	–

DAB PUMPS reserves the right to make modifications without notice.

NKM-G 65-200- STANDARDISED MONOBLOC CENTRIFUGAL ELECTRIC PUMPS FOR AIR CONDITIONING, REFRIGERATION, IRRIGATION, DECANTING, PRESSURISATION SYSTEMS, AND INDUSTRIAL APPLICATIONS

Pumped liquid temperature range: from -10 °C to +140 °C - **Maximum ambient temperature:** +40°C

≅ 1450 1/min

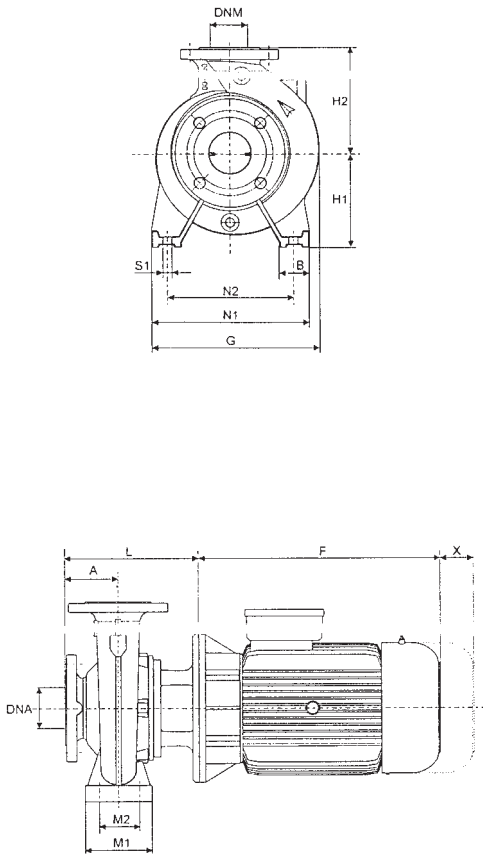

Construction features of the motor: B5

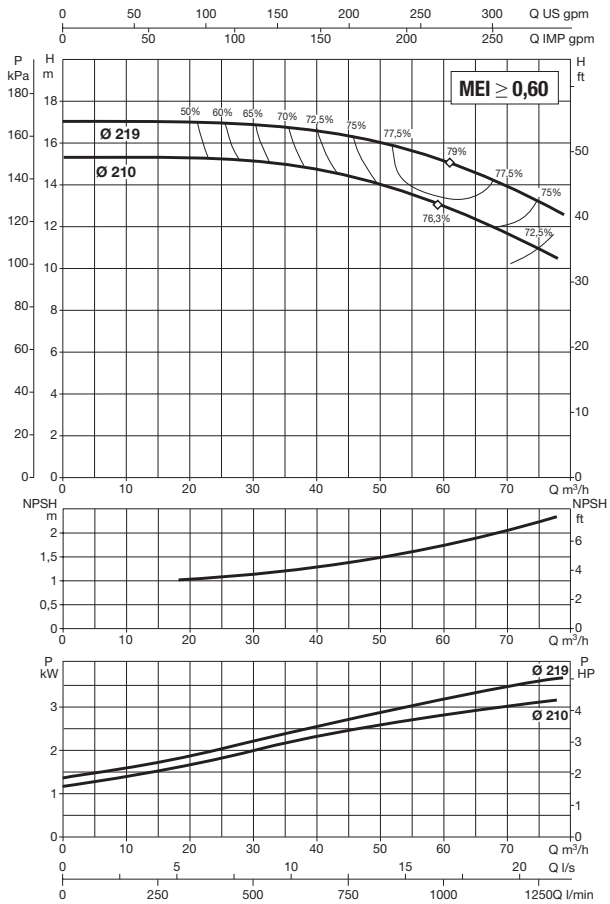

See hydraulic efficiency details on page 291.

The performance curves are based on kinematic viscosity values = 1 mm²/s and density equal to 1000 kg/m³. Curve tolerance according to ISO 9906.

MODEL	ELECTRICAL DATA						
	MOTOR SIZE	POWER INPUT 50 Hz	P2 NOMINAL		In A		MOTOR TYPE
			kW	HP	IE2	IE3	
NKM-G 65-200/210/ 3 /4	MEC 100 L	400 V Δ	3	4	6.25	–	IE2
NKM-G 65-200/219/ 4 /4	MEC 112 M	400 V Δ	4	5.5	7.95	–	IE2

MODEL	A	B	F		G	H1	H2	L	M1	M2	N1	N2	S1	X	Ø (mm) Mech. seal	DNA	DNM	PACKING DIMENSIONS			VOLUME (m³)	WEIGHT kg	
			IE2	IE3														L/A	L/B	H		IE2	IE3
NKM-G 65-200/210/ 3 /4	100	65	301	–	333	180	225	274	125	95	320	250	M10	140	28	80	65	670	420	540	0.152	88	–
NKM-G 65-200/219/ 4 /4	100	65	301	–	333	180	225	274	125	95	320	250	M10	140	28	80	65	670	420	540	0.152	96	–

NKM-G 65-250- STANDARDISED MONOBLOC CENTRIFUGAL ELECTRIC PUMPS FOR AIR CONDITIONING, REFRIGERATION, IRRIGATION, DECANTING, PRESSURISATION SYSTEMS, AND INDUSTRIAL APPLICATIONS

Pumped liquid temperature range: from -10 °C to +140 °C - **Maximum ambient temperature:** +40°C

≅ 1450 1/min

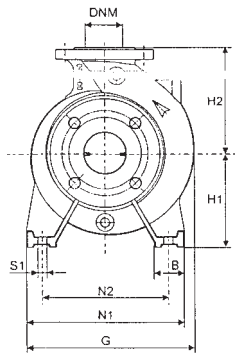

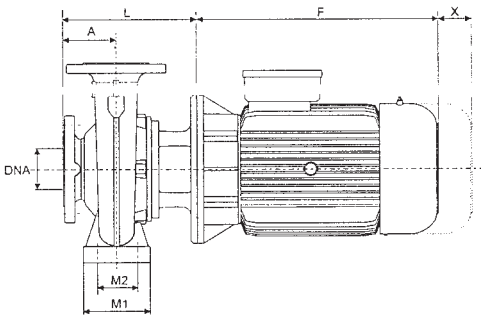

Construction features of the motor: B5

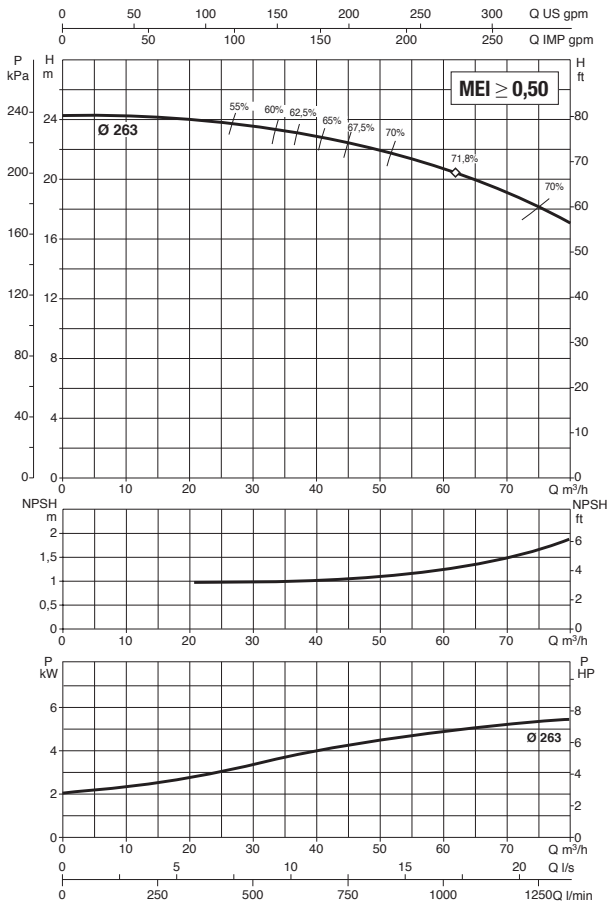

See hydraulic efficiency details on page 291.

The performance curves are based on kinematic viscosity values = 1 mm^2/s and density equal to 1000 kg/m^3. Curve tolerance according to ISO 9906.

MODEL	ELECTRICAL DATA						
	MOTOR SIZE	POWER INPUT 50 Hz	P2 NOMINAL		In A		MOTOR TYPE
			kW	HP	IE2	IE3	
NKM-G 65-250/263/ 5,5 /4	MEC132 S	400 V Δ	5.5	7.5	10.6	–	IE2

MODEL	A	B	F		G	H1	H2	L	M1	M2	N1	N2	S1	X	Ø (mm) Mech. seal	DNA	DNM	PACKING DIMENSIONS			VOLUME (m^3)	WEIGHT kg	
			IE2	IE3														L/A	L/B	H		IE2	IE3
NKM-G 65-250/263/ 5,5 /4	100	80	390	–	370	200	250	343	160	120	360	280	M14	140	38	80	65	1030	530	640	0.349	159	–

NKM-G 65-315- STANDARDISED MONOBLOC CENTRIFUGAL ELECTRIC PUMPS FOR AIR CONDITIONING, REFRIGERATION, IRRIGATION, DECANTING, PRESSURISATION SYSTEMS, AND INDUSTRIAL APPLICATIONS

Pumped liquid temperature range: from -10 °C to +140 °C - **Maximum ambient temperature:** +40°C

≅ 1450 1/min

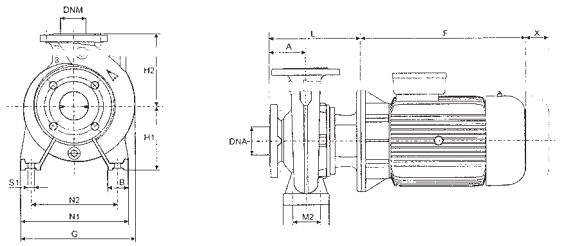

Construction features of the motor: B5

NKM-G 65-315 279

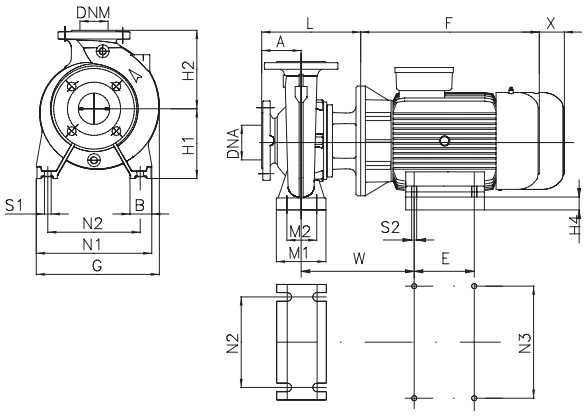

NKM-G 65-315 309

Construction features of the motor: B3/B5

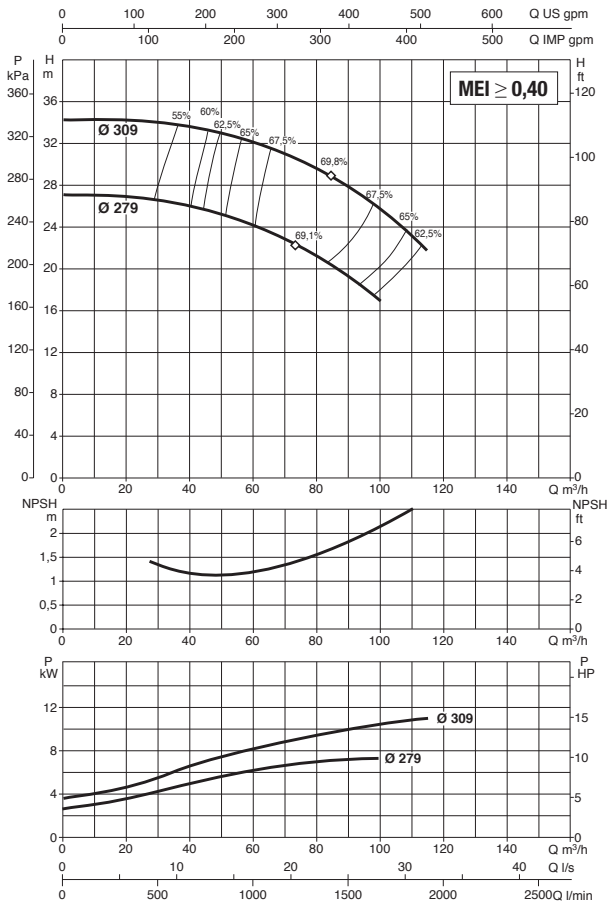

See hydraulic efficiency details on page 291.

The performance curves are based on kinematic viscosity values = 1 mm²/s and density equal to 1000 kg/m³. Curve tolerance according to ISO 9906.

MODEL	ELECTRICAL DATA						
	MOTOR SIZE	POWER INPUT 50 Hz	P2 NOMINAL		In A		MOTOR TYPE
			kW	HP	IE2	IE3	
NKM-G 65-315/279/ 7,5 /4	MEC 132 M	400 V Δ	7.5	10	14.2	14.6	IE2 / IE3
NKM-G 65-315/309/11 /4	MEC 160 M	400 V Δ	11	15	21.6	20.5	IE2 / IE3

MODEL	A	B	E	F		G	H1	H2	L	M1	M2	N1	N2	N3	S1	S2	W	X	H4	Ø (mm) Mech. seal	DNA	DNM	PACKING DIMENSIONS			VOL. (m³)	WEIGHT kg	
				IE2	IE3																		L/A	L/B	H		IE2	IE3
NKM-G 65-315/279/ 7,5 /4	125	80	–	430	437	429	225	280	368	160	120	400	315	–	M14	–	–	140	–	38	80	65	1030	530	640	0.349	157	163
NKM-G 65-315/309/11 /4	125	80	210	505	505	429	225	280	398	160	120	400	315	254	M14	M12	402	140	65	38	80	65	1030	530	640	0.349	206	231

NKM-G 80-160- STANDARDISED MONOBLOC CENTRIFUGAL ELECTRIC PUMPS FOR AIR CONDITIONING, REFRIGERATION, IRRIGATION, DECANTING, PRESSURISATION SYSTEMS, AND INDUSTRIAL APPLICATIONS

Pumped liquid temperature range: from -10 °C to +140 °C - **Maximum ambient temperature:** +40°C

≅ 1450 1/min

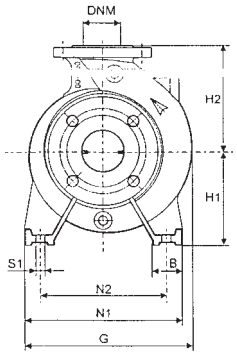

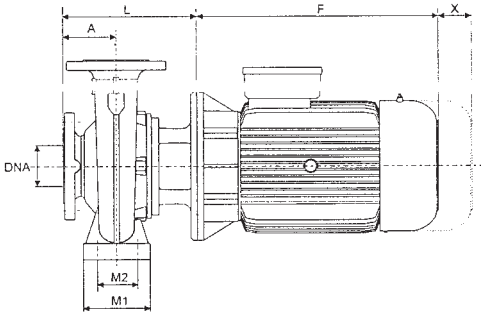

Construction features of the motor: B5

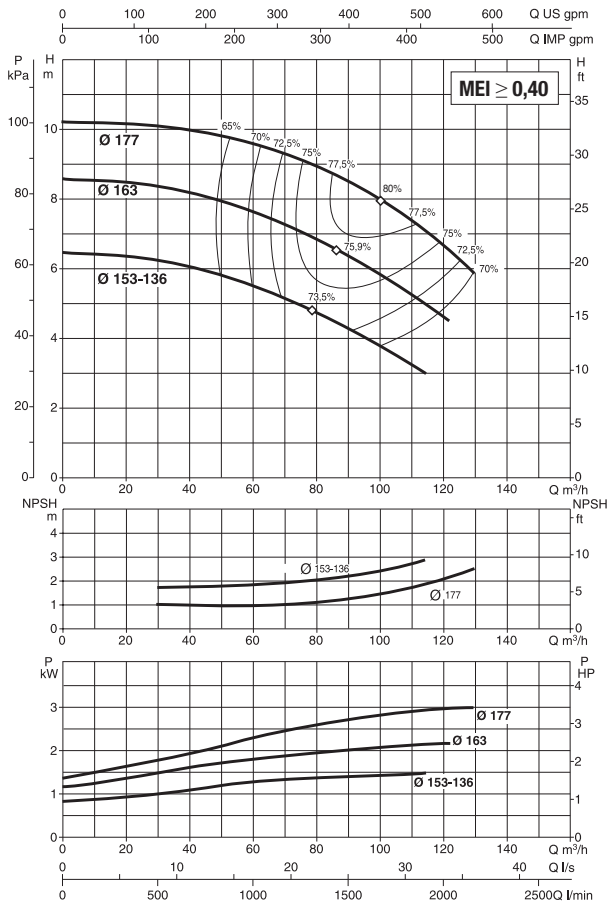

See hydraulic efficiency details on page 291.

The performance curves are based on kinematic viscosity values = 1 mm²/s and density equal to 1000 kg/m³. Curve tolerance according to ISO 9906.

MODEL	ELECTRICAL DATA						
	MOTOR SIZE	POWER INPUT 50 Hz	P2 NOMINAL		In A		MOTOR TYPE
			kW	HP	IE2	IE3	
NKM-G 80-160/153-136/1.5/4	MEC 90 L	230/400 V	1.5	2	6.24/3.6	–	IE2
NKM-G 80-160/163/ 2,2 /4	MEC 100 L	230/400 V	2.2	3	8.75/5.05	–	IE2
NKM-G 80-160/177/ 3 /4	MEC 100 L	400 V Δ	3	4	6.25	–	IE2

MODEL	A	B	F		G	H1	H2	L	M1	M2	N1	N2	S1	X	Ø (mm) Mech. seal	DNA	DNM	PACKING DIMENSIONS			VOLUME (m³)	WEIGHT kg	
			IE2	IE3														L/A	L/B	H		IE2	IE3
NKM-G 80-160/153-136/1.5/4	125	65	272	–	342	180	225	299	125	95	320	250	M10	140	28	100	80	670	420	540	0.152	83	–
NKM-G 80-160/163/ 2,2 /4	125	65	301	–	342	180	225	299	125	95	320	250	M10	140	28	100	80	670	420	540	0.152	83	–
NKM-G 80-160/177/ 3 /4	125	65	301	–	342	180	225	299	125	95	320	250	M10	140	28	100	80	670	420	540	0.152	87	–

NKM-G 80-200- STANDARDISED MONOBLOC CENTRIFUGAL ELECTRIC PUMPS FOR AIR CONDITIONING, REFRIGERATION, IRRIGATION, DECANTING, PRESSURISATION SYSTEMS, AND INDUSTRIAL APPLICATIONS

Pumped liquid temperature range: from -10 °C to +140 °C - **Maximum ambient temperature:** +40°C

≅ 1450 1/min

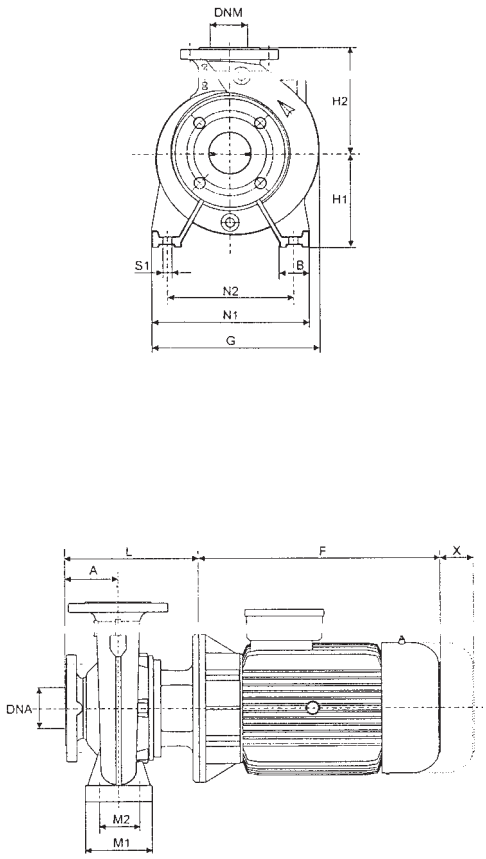

Construction features of the motor: B5

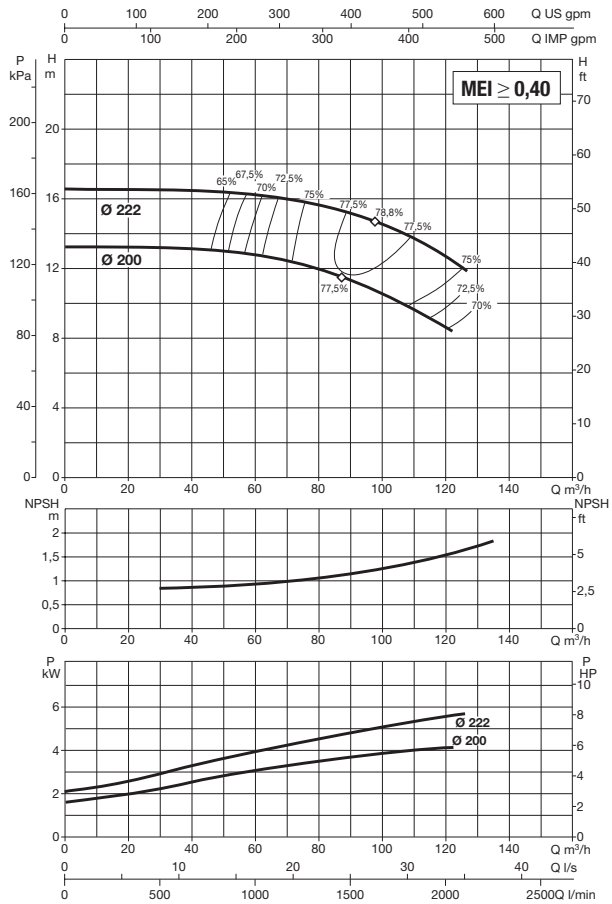

See hydraulic efficiency details on page 291.

The performance curves are based on kinematic viscosity values = 1 mm²/s and density equal to 1000 kg/m³. Curve tolerance according to ISO 9906.

MODEL	ELECTRICAL DATA						
	MOTOR SIZE	POWER INPUT 50 Hz	P2 NOMINAL		In A		MOTOR TYPE
			kW	HP	IE2	IE3	
NKM-G 80-200/200/ 4 /4	MEC 112 M	400 V Δ	4	5.5	7.95	–	IE2
NKM-G 80-200/222/ 5,5 /4	MEC 132 S	400 V Δ	5.5	7.5	10.6	–	IE2

MODEL	A	B	F		G	H1	H2	L	M1	M2	N1	N2	S1	X	Ø (mm) Mech. seal	DNA	DNM	PACKING DIMENSIONS			VOLUME (m³)	WEIGHT kg	
			IE2	IE3														L/A	L/B	H		IE2	IE3
NKM-G 80-200/200/ 4 /4	125	65	301	–	365	180	250	368	125	95	345	280	M10	140	38	100	80	1030	530	640	0.349	118	–
NKM-G 80-200/222/ 5,5 /4	125	65	390	–	365	180	250	368	125	95	345	280	M10	140	38	100	80	1030	530	640	0.349	147	–

NKM-G 80-250- STANDARDISED MONOBLOC CENTRIFUGAL ELECTRIC PUMPS FOR AIR CONDITIONING, REFRIGERATION, IRRIGATION, DECANTING, PRESSURISATION SYSTEMS, AND INDUSTRIAL APPLICATIONS

Pumped liquid temperature range: from -10 °C to +140 °C - **Maximum ambient temperature:** +40°C

≅ 1450 1/min

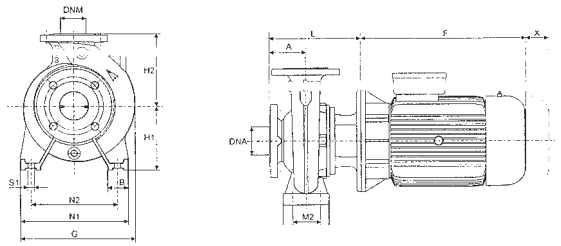

Construction features of the motor: B5

NKM-G 80-250 240

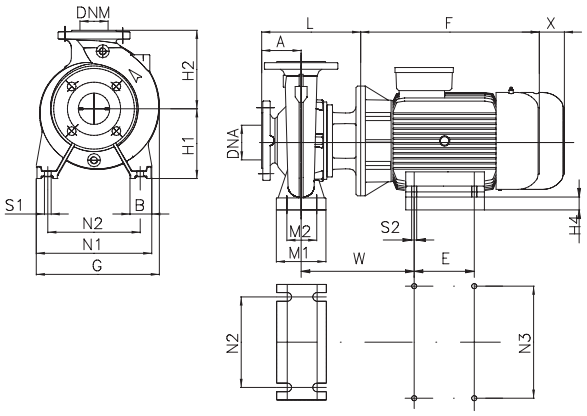

NKM-G 80-250 270

Construction features of the motor: B3/B5

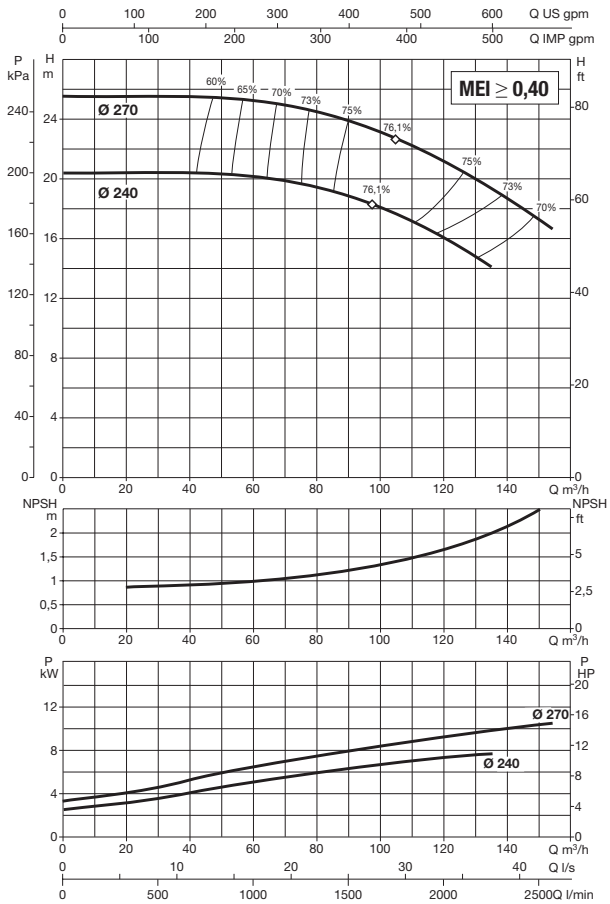

See hydraulic efficiency details on page 291.

The performance curves are based on kinematic viscosity values = 1 mm²/s and density equal to 1000 kg/m³. Curve tolerance according to ISO 9906.

MODEL	ELECTRICAL DATA						
	MOTOR SIZE	POWER INPUT 50 Hz	P2 NOMINAL		In A		MOTOR TYPE
			kW	HP	IE2	IE3	
NKM-G 80-250/240/ 7,5 /4	MEC 132 M	400 V Δ	7.5	10	14.2	14.6	IE2 / IE3
NKM-G 80-250/270/11 /4	MEC 160 M	400 V Δ	11	15	21.6	20.5	IE2 / IE3

MODEL	A	B	E	F		G	H1	H2	L	M1	M2	N1	N2	N3	S1	S2	W	X	H4	Ø (mm) Mech. seal	DNA	DNM	PACKING DIMENSIONS			VOL. (m³)	WEIGHT kg	
				IE2	IE3																		L/A	L/B	H		IE2	IE3
NKM-G 80-250/240/ 7,5 /4	125	80	–	430	437	410	200	280	368	160	120	400	315	–	M14	–	–	140	–	38	100	80	1030	530	640	0.349	152	153
NKM-G 80-250/270/11 /4	125	80	210	505	505	410	200	280	398	160	120	400	315	254	M14	M12	381	140	40	38	100	80	1030	530	640	0.349	180	205

NKM-G 80-315- STANDARDISED MONOBLOC CENTRIFUGAL ELECTRIC PUMPS FOR AIR CONDITIONING, REFRIGERATION, IRRIGATION, DECANTING, PRESSURISATION SYSTEMS, AND INDUSTRIAL APPLICATIONS

Pumped liquid temperature range: from -10 °C to +140 °C - **Maximum ambient temperature:** +40°C

≅ 1450 1/min

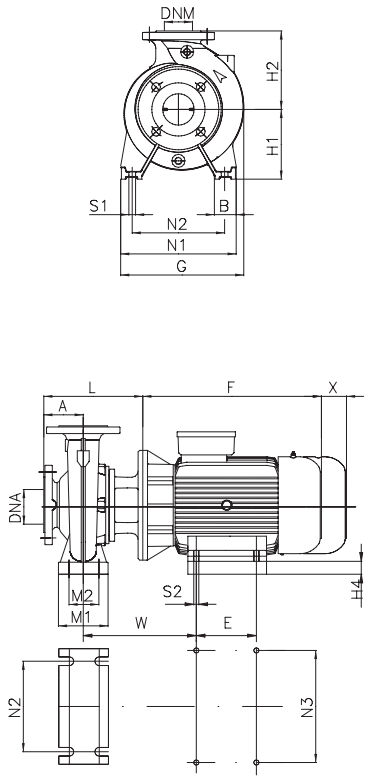

Construction features of the motor: B3/B5

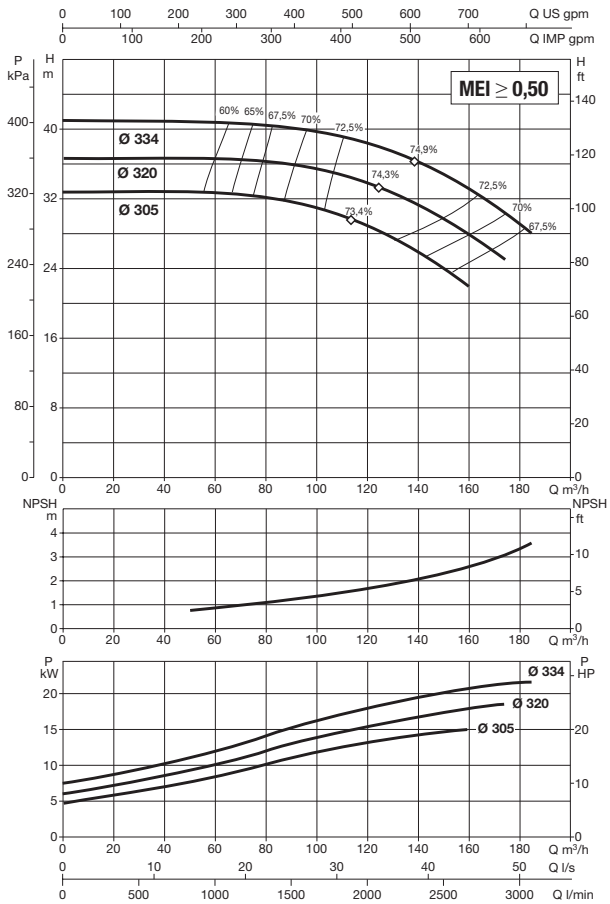

See hydraulic efficiency details on page 291.

The performance curves are based on kinematic viscosity values = 1 mm²/s and density equal to 1000 kg/m³. Curve tolerance according to ISO 9906.

MODEL	ELECTRICAL DATA						
	MOTOR SIZE	POWER INPUT 50 Hz	P2 NOMINAL		In A		MOTOR TYPE
			kW	HP	IE2	IE3	
NKM-G 80-315/305/15 /4	MEC 160 L	400 V Δ	15	20	29	28	IE2 / IE3
NKM-G 80-315/320/18,5 /4	MEC 180 M	400 V Δ	18.5	25	33	34	IE2 / IE3
NKM-G 80-315/334/22 /4	MEC 180 L	400 V Δ	22	30	40	40.5	IE2 / IE3

MODEL	A	B	E	F		G	H1	H2	L	M1	M2	N1	N2	N3	S1	S2	W	X	H4	Ø (mm) Mech. seal	DNA	DNM	PACKING DIMENSIONS			VOL. (m³)	WEIGHT kg	
				IE2	IE3																		L/A	L/B	H		IE2	IE3
NKM-G 80-315/305/15 /4	125	80	254	560	548	460	250	315	398	160	120	400	315	254	M14	M12	402	140	90	38	100	80	1130	580	740	0.485	227	263
NKM-G 80-315/320/18,5 /4	125	80	241	580	580	460	250	315	398	160	120	400	315	279	M14	M12	429	140	70	38	100	80	1130	580	740	0.485	259	275
NKM-G 80-315/334/22 /4	125	80	279	580	580	460	250	315	398	160	120	400	315	279	M14	M12	415	140	70	38	100	80	1130	580	740	0.485	256	298

DAB PUMPS reserves the right to make modifications without notice.

NKM-G 100-200- STANDARDISED MONOBLOC CENTRIFUGAL ELECTRIC PUMPS FOR AIR CONDITIONING, REFRIGERATION, IRRIGATION, DECANTING, PRESSURISATION SYSTEMS, AND INDUSTRIAL APPLICATIONS

Pumped liquid temperature range: from -10 °C to +140 °C - **Maximum ambient temperature:** +40°C

≅ 1450 1/min

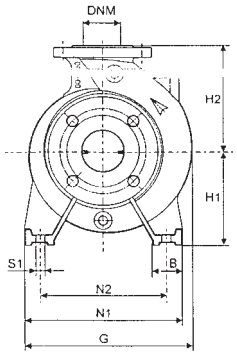

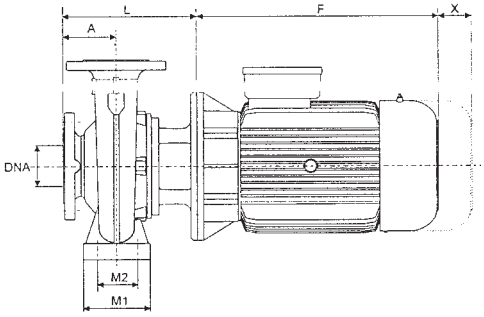

Construction features of the motor: B5

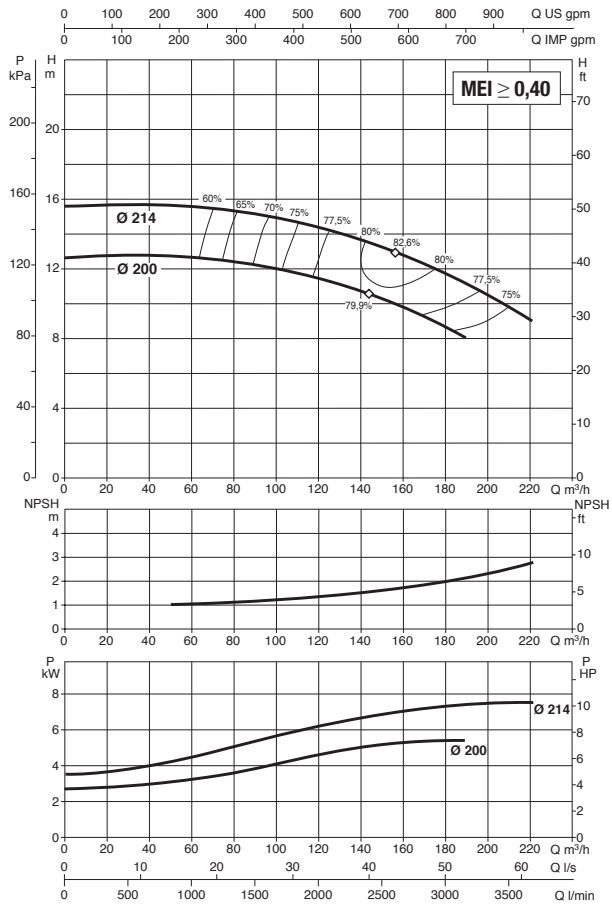

See hydraulic efficiency details on page 291.

The performance curves are based on kinematic viscosity values = 1 mm²/s and density equal to 1000 kg/m³. Curve tolerance according to ISO 9906.

MODEL	ELECTRICAL DATA						
	MOTOR SIZE	POWER INPUT 50 Hz	P2 NOMINAL		In A		MOTOR TYPE
			kW	HP	IE2	IE3	
NKM-G100-200/200/ 5.5 /4	MEC 132 S	400 V Δ	5.5	7.5	10.6	–	IE2
NKM-G100-200/214/ 7.5 /4	MEC 132 M	400 V Δ	7.5	10	14.2	14.6	IE2 / IE3

MODEL	A	B	F		G	H1	H2	L	M1	M2	N1	N2	S1	X	Ø (mm) Mech. seal	DNA	DNM	PACKING DIMENSIONS			VOLUME (m^3)	WEIGHT kg	
			IE2	IE3														L/A	L/B	H		IE2	IE3
NKM-G100-200/200/ 5.5 /4	125	80	390	–	392	200	280	368	160	120	360	280	M14	140	38	125	100	1030	530	640	0.349	160	–
NKM-G100-200/214/ 7.5 /4	125	80	430	437	392	200	280	368	160	120	360	280	M14	140	38	125	100	1030	530	640	0.349	140	149

NKM-G 100-250- STANDARDISED MONOBLOC CENTRIFUGAL ELECTRIC PUMPS FOR AIR CONDITIONING, REFRIGERATION, IRRIGATION, DECANTING, PRESSURISATION SYSTEMS, AND INDUSTRIAL APPLICATIONS

Pumped liquid temperature range: from -10 °C to +140 °C - **Maximum ambient temperature:** +40°C

≅ 1450 1/min

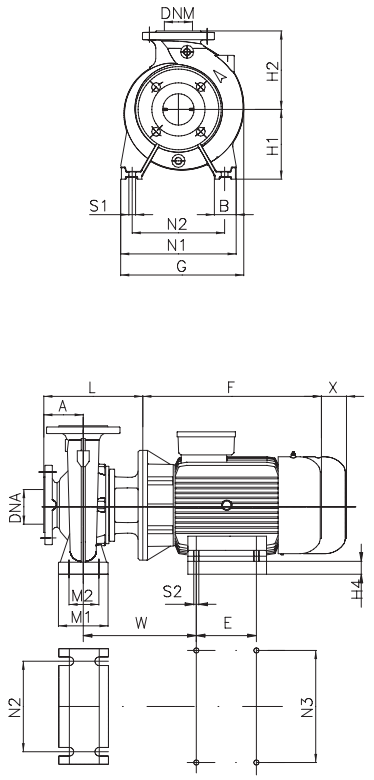

Construction features of the motor: B3/B5

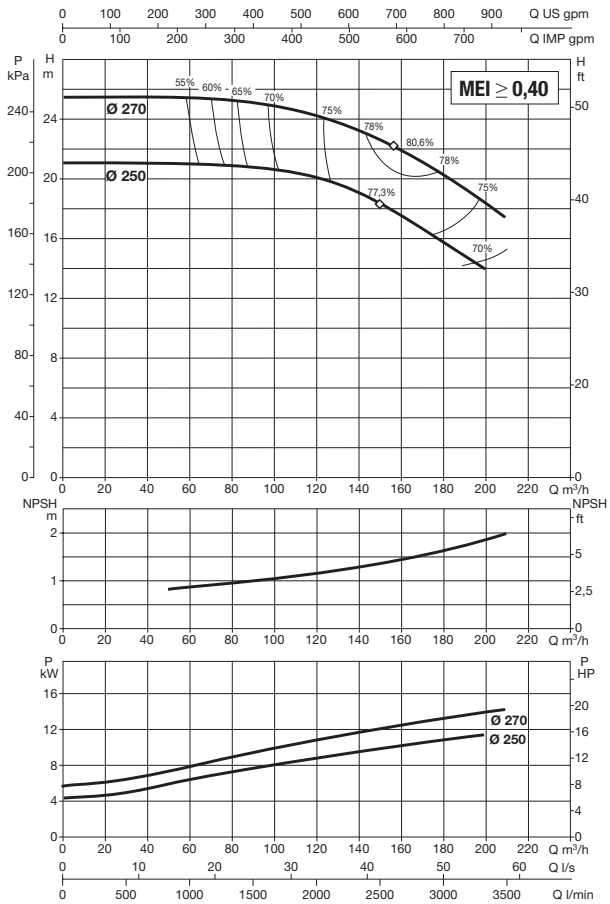

See hydraulic efficiency details on page 291.

The performance curves are based on kinematic viscosity values = 1 mm²/s and density equal to 1000 kg/m³. Curve tolerance according to ISO 9906.

MODEL	ELECTRICAL DATA						
	MOTOR SIZE	POWER INPUT 50 Hz	P2 NOMINAL		In A		MOTOR TYPE
			kW	HP	IE2	IE3	
NKM-G100-250/250/11 /4	MEC 160 M	400 V Δ	11	15	21.6	20.5	IE2 / IE3
NKM-G100-250/270/15 /4	MEC 160 L	400 V Δ	15	20	29	28	IE2 / IE3

MODEL	A	B	E	F		G	H1	H2	L	M1	M2	N1	N2	N3	S1	S2	W	X	H4	Ø (mm) Mech. seal	DNA	DNM	PACKING DIMENSIONS			VOL. (m³)	WEIGHT kg	
				IE2	IE3																		L/A	L/B	H		IE2	IE3
NKM-G100-250/250/11 /4	140	80	210	505	505	424	225	280	413	160	120	400	315	254	M14	M12	381	140	65	38	125	100	1030	530	640	0.349	189	213
NKM-G100-250/270/15 /4	140	80	254	560	548	424	225	280	413	160	120	400	315	254	M14	M12	381	140	65	38	125	100	1030	530	640	0.485	227	237

NKM-G 100-315- STANDARDISED MONOBLOC CENTRIFUGAL ELECTRIC PUMPS FOR AIR CONDITIONING, REFRIGERATION, IRRIGATION, DECANTING, PRESSURISATION SYSTEMS, AND INDUSTRIAL APPLICATIONS

Pumped liquid temperature range: from -10 °C to +140 °C - **Maximum ambient temperature:** +40°C

≅ 1450 1/min

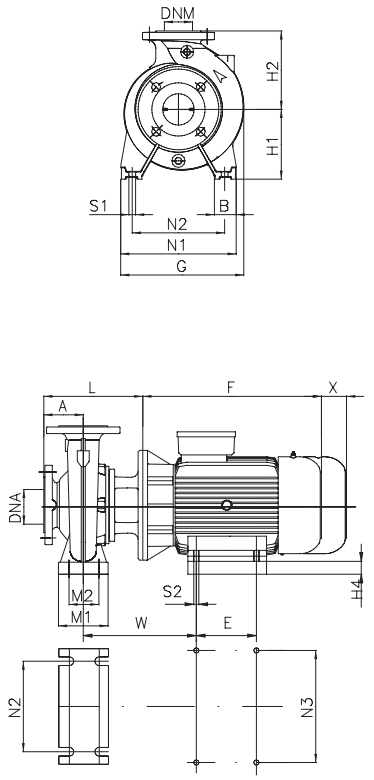

Construction features of the motor: B3/B5

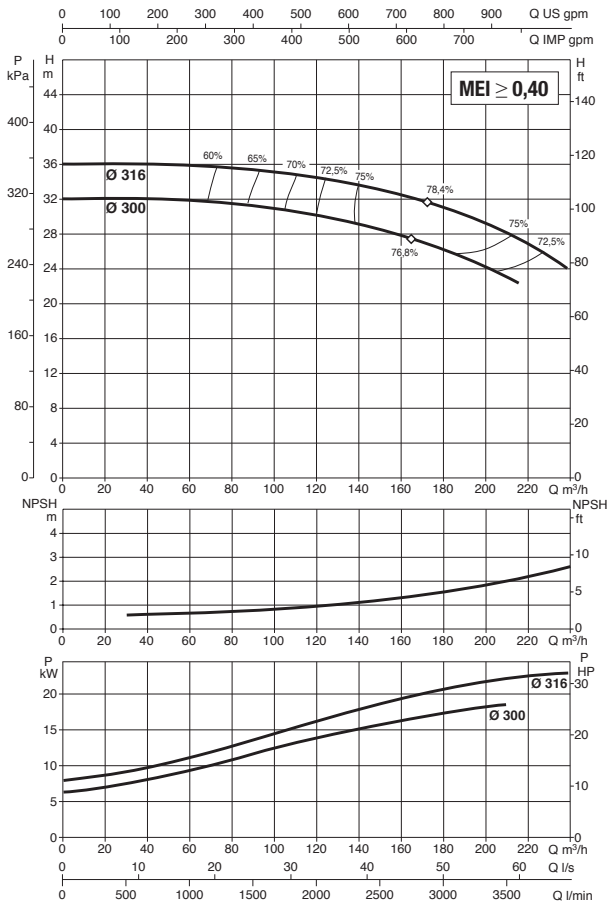

See hydraulic efficiency details on page 291.

The performance curves are based on kinematic viscosity values = 1 mm²/s and density equal to 1000 kg/m³. Curve tolerance according to ISO 9906.

MODEL	ELECTRICAL DATA						
	MOTOR SIZE	POWER INPUT 50 Hz	P2 NOMINAL		In A		MOTOR TYPE
			kW	HP	IE2	IE3	
NKM-G100-315/300/18.5 /4	MEC 180 M	400 V Δ	18.5	25	33	34	IE2 / IE3
NKM-G100-315/316/22 /4	MEC 180 L	400 V Δ	22	30	40	40.5	IE2 / IE3

MODEL	A	B	E	F		G	H1	H2	L	M1	M2	N1	N2	N3	S1	S2	W	X	H4	Ø (mm) Mech. seal	DNA	DNM	PACKING DIMENSIONS			VOL. (m^3)	WEIGHT kg	
				IE2	IE3																		L/A	L/B	H		IE2	IE3
NKM-G100-315/300/18.5 /4	140	80	241	580	580	478	250	315	413	160	120	400	315	279	M14	M12	529	140	70	38	125	100	1030	530	640	0.485	253	257
NKM-G100-315/316/22 /4	140	80	279	580	580	478	250	315	413	160	120	400	315	279	M14	M12	415	140	70	38	125	100	1030	530	640	0.485	261	272

NKM-G 125-250- STANDARDISED MONOBLOC CENTRIFUGAL ELECTRIC PUMPS FOR AIR CONDITIONING, REFRIGERATION, IRRIGATION, DECANTING, PRESSURISATION SYSTEMS, AND INDUSTRIAL APPLICATIONS

Pumped liquid temperature range: from -10 °C to +140 °C - **Maximum ambient temperature:** +40°C

≅ 1450 1/min

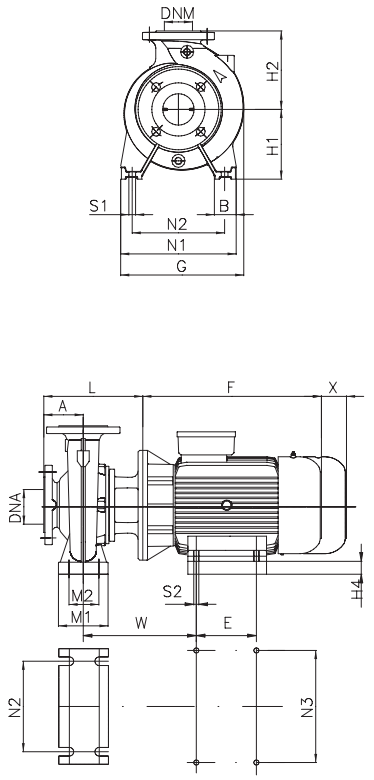

Construction features of the motor: B3/B5

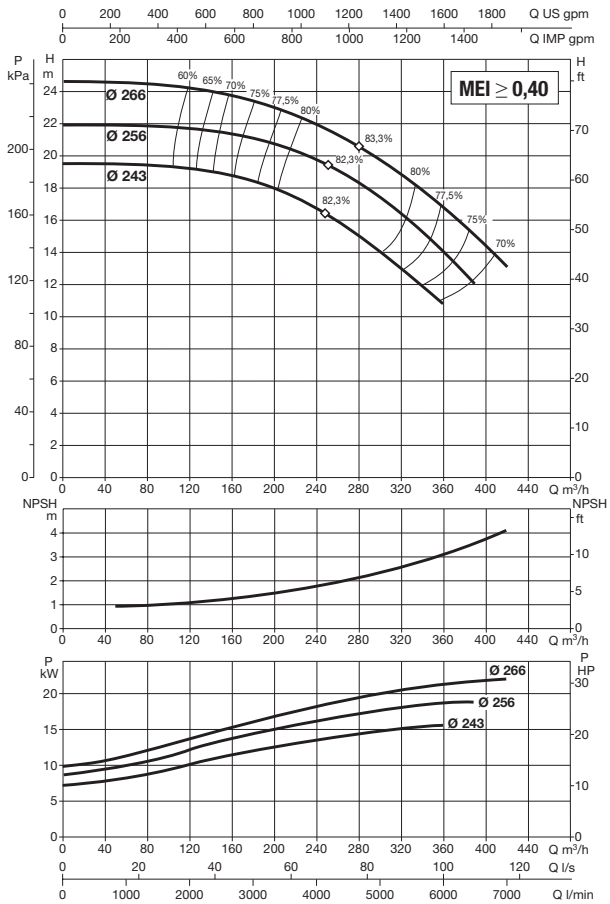

See hydraulic efficiency details on page 291.

The performance curves are based on kinematic viscosity values = 1 mm²/s and density equal to 1000 kg/m³. Curve tolerance according to ISO 9906.

MODEL	ELECTRICAL DATA						
	MOTOR SIZE	POWER INPUT 50 Hz	P2 NOMINAL		In A		MOTOR TYPE
			kW	HP	IE2	IE3	
NKM-G125-250/243/15 /4	MEC 160 L	400 V Δ	15	20	29	28	IE2 / IE3
NKM-G125-250/256/18,5 /4	MEC 180 M	400 V Δ	18.5	25	33	34	IE2 / IE3
NKM-G125-250/266/22 /4	MEC 180 L	400 V Δ	22	30	40	40.5	IE2 / IE3

MODEL	A	B	E	F		G	H1	H2	L	M1	M2	N1	N2	N3	S1	S2	W	X	H4	Ø (mm) Mech. seal	DNA	DNM	PACKING DIMENSIONS			VOL. (m^3)	WEIGHT kg	
				IE2	IE3																		L/A	L/B	H		IE2	IE3
NKM-G125-250/243/15 /4	140	80	254	560	548	472	250	355	413	160	120	400	315	254	M14	M12	381	140	90	38	150	125	1130	580	740	0.485	232	274
NKM-G125-250/256/18,5 /4	140	80	241	580	580	472	250	355	413	160	120	400	315	279	M14	M12	394	140	70	38	150	125	1130	580	740	0.485	253	290
NKM-G125-250/266/22 /4	140	80	279	580	580	472	250	355	413	160	120	400	315	279	M14	M12	394	140	70	38	150	125	1130	580	740	0.485	271	309

NKM-G 150-200- STANDARDISED MONOBLOC CENTRIFUGAL ELECTRIC PUMPS FOR AIR CONDITIONING, REFRIGERATION, IRRIGATION, DECANTING, PRESSURISATION SYSTEMS, AND INDUSTRIAL APPLICATIONS

Pumped liquid temperature range: from -10 °C to +140 °C - **Maximum ambient temperature:** +40°C

≅ 1450 1/min

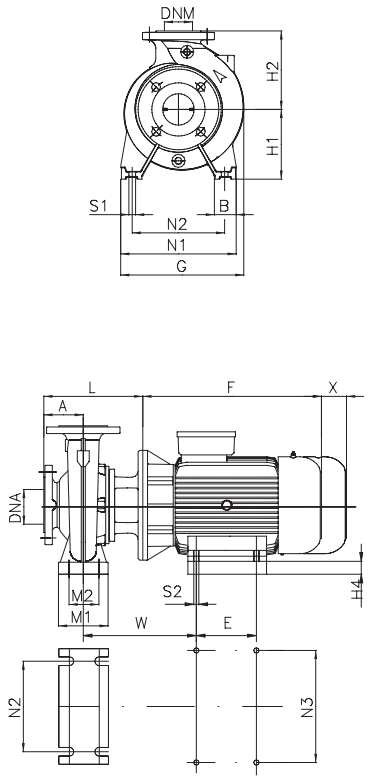

Construction features of the motor: B3/B5

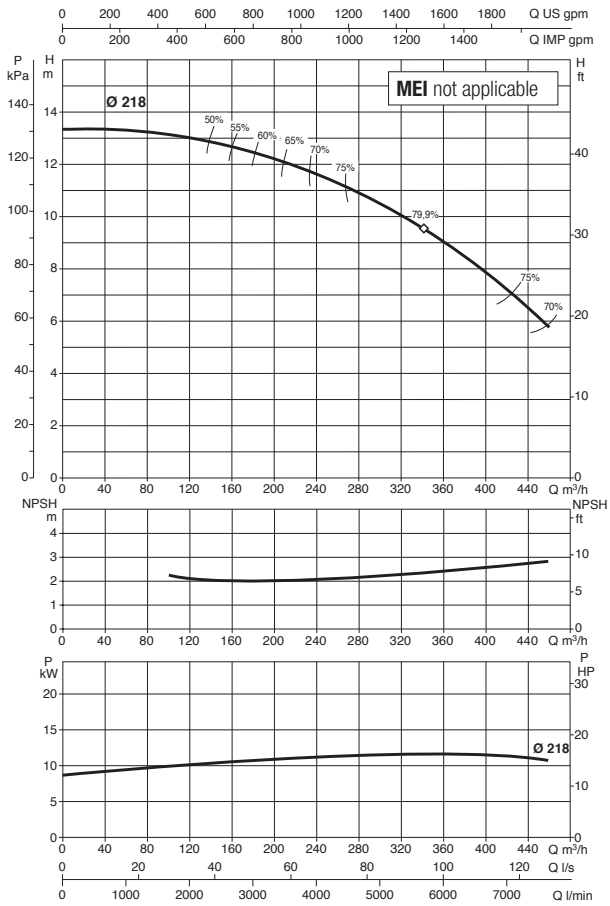

See hydraulic efficiency details on page 291.

The performance curves are based on kinematic viscosity values = 1 mm²/s and density equal to 1000 kg/m³. Curve tolerance according to ISO 9906.

MODEL	ELECTRICAL DATA						
	MOTOR SIZE	POWER INPUT 50 Hz	P2 NOMINAL		In A		MOTOR TYPE
			kW	HP	IE2	IE3	
NKM-G150-200/218/11 /4	MEC 160 M	400 V Δ	11	15	21.6	20.5	IE2 / IE3

MODEL	A	B	E	F		G	H1	H2	L	M1	M2	N1	N2	N3	S1	W	X	H4	Ø (mm) Mech. seal	DNA	DNM	PACKING DIMENSIONS			VOL. (m³)	WEIGHT kg	
				IE2	IE3																	L/A	L/B	H		IE2	IE3
NKM-G150-200/218/11 /4	160	100	210	505	505	593	280	400	433	200	150	550	450	254	M20	381	140	120	38	200	150	1130	650	900	0.661	260	280

NKP-G RANGE

STANDARDISED MONOBLOC CENTRIFUGAL ELECTRIC PUMPS

PERFORMANCE RANGE

The performance curves are based on kinematic viscosity values = 1 mm²/s and density equal to 1000 kg/m³. Curve tolerance according to ISO 9906.

GRAPHIC SELECTION TABLE

≅ 2900 1/min

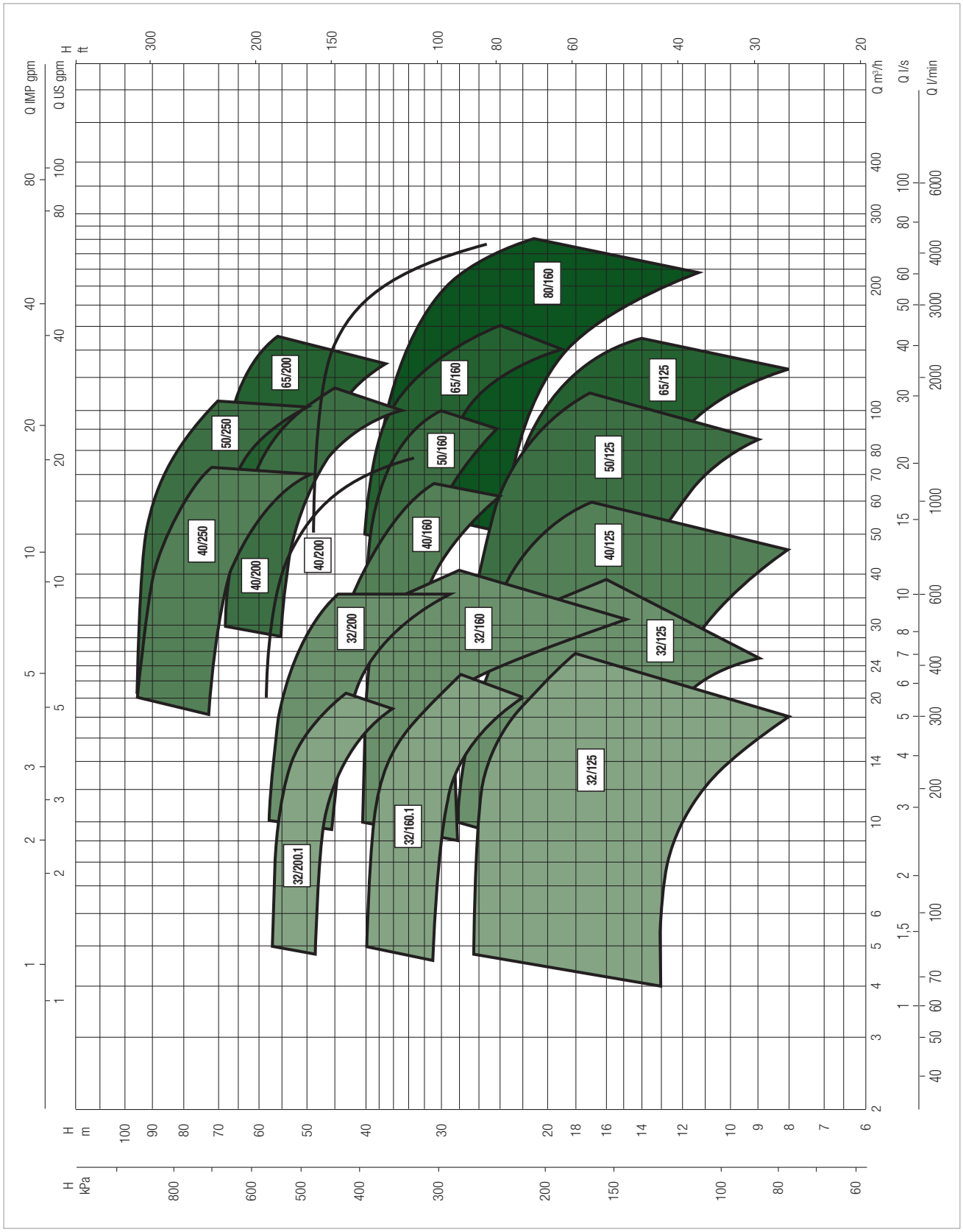

NKP-G

STANDARDISED MONOBLOC CENTRIFUGAL ELECTRIC PUMPS

SELECTION TABLE - NKP-G 32

MODEL	Q=m³/h	0	6	12	18	24	30	36	42
	Q=l/min	0	100	200	300	400	500	600	700
NKP-G 32-125.1/102/0.75/2	H (m)	13	12.5	11	8				
NKP-G 32-125.1/115/1.1/2		17.2	17	15	12.5				
NKP-G 32-125.1/125/1.5/2		21	20.8	19	16.8				
NKP-G 32-125.1/140/2.2/2		27	26.9	25.9	23	19.5			
NKP-G 32-125/110/ 1.1 /2		15.8	15.2	14.5	12.9	9.9			
NKP-G 32-125/120/ 1.5 /2		19.3	18.9	18.2	16.8	14.5			
NKP-G 32-125/130/ 2.2 /2		23.6	23.1	23	21.6	19.6	16.8		
NKP-G 32-125/142/ 3 /2		28.6	28	27.6	26.5	24.6	21.8	17.9	
NKP-G 32-160.1 155/2.2/2		31.7	32.4	31	26.7				
NKP-G 32-160.1 166/3 /2		36.7	37.3	36.3	32.8	27			
NKP-G 32-160.1 177/4/2		42.7	43.4	42.6	38.5	33.9			
NKP-G 32-160/151 /3 /2		30.5	30	29	27	24	19.5		
NKP-G 32-160/163 /4 /2		36.2	36	35	33.5	30.5	27	22	
NKP-G 32-160/177 /5,5/2		43.5	43.2	42.6	41.5	39	36	31.5	25.5
NKP-G 32-200.1 188/4 /2		45.3	44.4	40.8	34.4	26.8			
NKP-G 32-200.1 205/5,5/2		56.6	55.7	52	45.8	36.2			
NKP-G 32-200/190/ 5.5 /2		46.9	46.5	45	43	40	35	29	
NKP-G 32-200/210/ 7.5 /2		58.8	58	57	56	53	49	44	

SELECTION TABLE - NKP-G 40

MODEL	Q=m³/h	0	6	12	18	24	30	36	42	48	54	60	66	72
	Q=l/min	0	100	200	300	400	500	600	700	800	900	1000	1100	1200
NKP-G 40-125/107/ 1.5 /2	H (m)	14.7	14.5	14.3	13.8	13	11.8	10.5	8.6	7				
NKP-G 40-125/120/ 2.2 /2		19	18.7	18.4	17.8	17	15.9	14.6	13	11				
NKP-G 40-125/130/ 3 /2		22.8	22.5	22.3	22	21.2	20.2	19	17.4	15.5	13.5			
NKP-G 40-125/139/ 4 /2		26.4	26.2	26	25.6	25	24	23	21.5	19.5	17.5	15		
NKP-G 40-160/158/ 5,5 /2		33.7			34	33.4	32.4	31	29.5	27	24			
NKP-G 40-160/172/ 7,5 /2		40.7			40.2	40.1	39.8	38.5	37.5	35.5	33	30	26.5	
NKP-G 40-200/210/11 /2		57.1	57	57	56.8	56.5	56	55	53	50	47	43.5	39	
NKP-G 40-250/230/15 /2		72.5			72.5	72	70	68	66	62.5	60	56	51.5	
NKP-G 40-250/245/18.5 /2		83			83	82.5	81.5	80	77	74	71.5	67.5	63.5	58.5
NKP-G 40-250/260/22 /2		96			95	94.5	93.5	92	90	87.5	84	81	76.5	71.5

DAB PUMPS reserves the right to make modifications without notice.

SELECTION TABLE - NKP-G 50

MODEL	Q=m³/h	0	6	12	18	24	30	36	42	48	54	60	66	72	78	84	90	102	114
	Q=l/min	0	100	200	300	400	500	600	700	800	900	1000	1100	1200	1300	1400	1500	1700	1900
NKP-G 50-125/115/ 3 /2	H (m)	17				16.5	16	15.5	15	14.5	13.7	13	12	11	10	9			
NKP-G 50-125/125/ 4 /2		20.5				20	19.5	19.1	18.5	18	17.5	16.5	15.8	14.8	14	12.5	11.5		
NKP-G 50-125/135/ 5,5 /2		24				23.6	23.5	23.2	22.8	22.2	21.5	21	20	19.1	18.5	17.5	16.5	13.4	
NKP-G 50-125/144/ 7,5 /2		28				27.8	27.5	27.3	27	26.5	25.8	25.3	24.5	23.5	23	21.5	20.5	18	15.5
NKP-G 50-160/153/ 7.5 /2		31.9				31.5	31.5	31.5	31.2	31	30.5	29.5	28.5	27.5	26	25	23.5		
NKP-G 50-160/169/11 /2		39.6					39.5	39.3	39.1	39	38.5	38	37.2	36.5	35	34	32.5		
NKP-G 50-200/200/15 /2		55.1					54.7	54.6	54	53.5	52	51	49	47.5	45.5	43	41		
NKP-G 50-200/210/18,5 /2		61.7					61.7	61.6	61.5	60.5	59	58	56.5	55	53	51	48.5	43	
NKP-G 50-200/219/22 /2		67.7					67.5	67.4	66.5	66	65.5	64	62.5	61	59.5	57	55	50	
NKP-G 50-250/230/22 /2		73.6					73.2	73.1	72.8	72	71	68.5	67	65	62.5	60	57	49	
NKP-G 50-250/257/30 /2		93					92.5	92.3	92	91.5	91	89	87.5	86	83	81	78	72	

SELECTION TABLE - NKP-G 65

MODEL	Q=m³/h	0	6	12	18	24	30	36	42	48	54	60	66	72	78	84	90	102	114	120	150
	Q=l/min	0	100	200	300	400	500	600	700	800	900	1000	1100	1200	1300	1400	1500	1700	1900	1200	2500
NKP-G 65-125/120-110/4/2	H (m)	16						15	14.6	14.2	13.7	13.3	12.8	12.3	12	11.4	10	8.5	8		
NKP-G 65-125/127/ 5,5 /2		19.5						19	18.9	18.7	18.4	18.1	17.5	17.2	16.9	16.5	15.8	14.5	13	12	
NKP-G 65-125/137/ 7,5 /2		23.5						23.1	23	22.8	22.6	22.5	22	21.6	21.1	20.7	20.2	19	17.5	14.8	12
NKP-G 65-160/157/11 /2		32.5								32.3	32	31.9	1.3	30.2	30	29.2	28.7	27	24.8	23.6	
NKP-G 65-160/173/15 /2		40.1								39.7	39.6	39.5	39.5	39	38.5	38.2	37.5	36	34.5	33.5	26.9
NKP-G 65-200/190/18,5 /2		51.1								51	50.8	50.5	50	49	48.5	48	47.5	45	42.5	41	
NKP-G 65-200/200/22 /2		56.4								56.1	56.1	56	55.8	55.5	55	54.8	54.5	53	51	49	
NKP-G 65-200/219/30 /2		68.9								68.8	68.8	68.7	68.7	68.6	68.5	68.4	67.5	66	64	63.1	57

SELECTION TABLE - NKP-G 80

MODEL	Q=m³/h	0	6	12	18	24	30	36	42	48	54	60	66	72	78	84	90	102	114	120	150	180	210	240
	Q=l/min	0	100	200	300	400	500	600	700	800	900	1000	1100	1200	1300	1400	1500	1700	1900	1200	2500	3000	3500	4000
NKP-G 80-160/147-127/11 /2	H (m)	24.5															22	21.4	20.4	20	17.4	16.8	12	
NKP-G 80-160/153/15 /2		30.5															29	28.4	27.5	27	24.5	21.3	18.3	
NKP-G 80-160/163/18,5 /2		35.5															34.3	33.6	32.6	32.3	29.8	26.8	23.6	20
NKP-G 80-160/169/22 /2		38.5															37.2	36.8	36	35.8	33.5	30.8	27.5	24
NKP-G 80-200/190/30 /2		408.3															47.9	47.6	47.5	47.3	44.7	41	36	29

DAB PUMPS reserves the right to make modifications without notice.

NKP-G 32-125.1 - STANDARDISED MONOBLOC CENTRIFUGAL ELECTRIC PUMPS FOR AIR CONDITIONING, REFRIGERATION, IRRIGATION, DECANTING, PRESSURISATION SYSTEMS, AND INDUSTRIAL APPLICATIONS

Pumped liquid temperature range: from -10 °C to +140 °C - **Maximum ambient temperature:** +40°C

≅ 2900 1/min

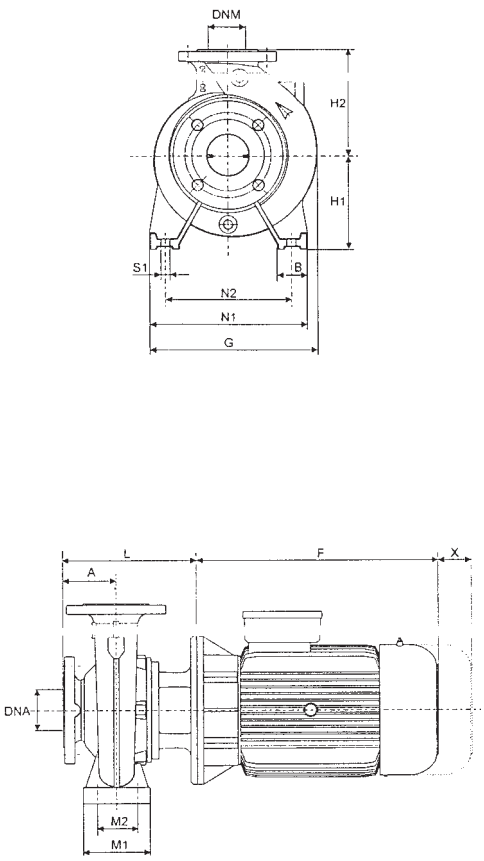

Construction features of the motor: B5

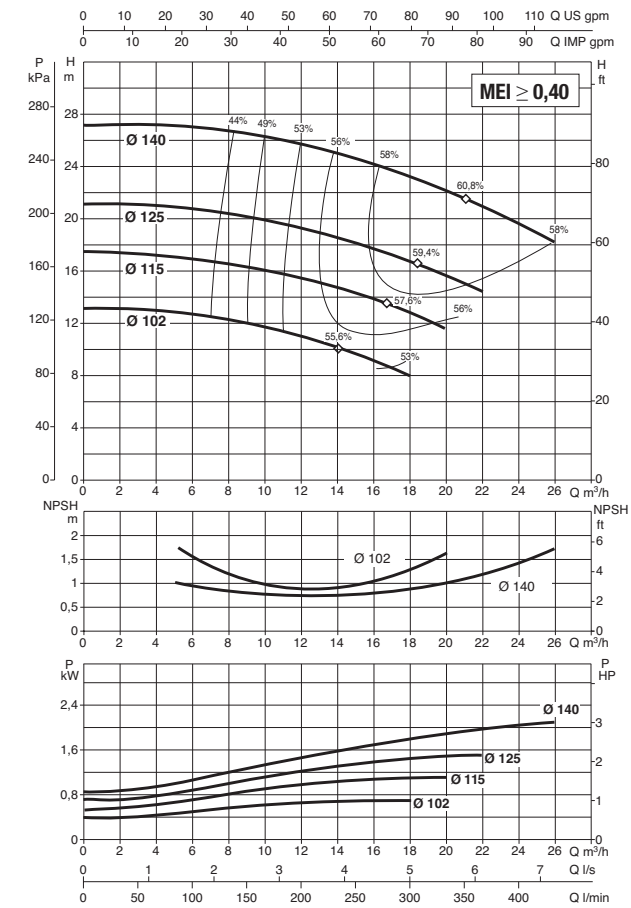

See hydraulic efficiency details on page 291.

The performance curves are based on kinematic viscosity values = 1 mm²/s and density equal to 1000 kg/m³. Curve tolerance according to ISO 9906.

MODEL	ELECTRICAL DATA						
	MOTOR SIZE	POWER INPUT 50 Hz	P2 NOMINAL		In A		MOTOR TYPE
			kW	HP	IE2	IE3	
NKP-G 32-125.1/102/0.75/2	MEC 80	230/400 V	0.75	1	2.81/1.62	–	IE2
NKP-G 32-125.1/115/1.1/2	MEC 80	230/400 V	1.1	1.5	4.07/2.36	–	IE2
NKP-G 32-125.1/125/1.5/2	MEC 90 S	230/400 V	1.5	2	5.8/3.35	–	IE2
NKP-G 32-125.1/140/2.2/2	MEC 90 L	230/400 V	2.2	3	8.23/4.75	–	IE2

MODEL	A	B	F		G	H1	H2	L	M1	M2	N1	N2	S1	X	Ø (mm) Mech. seal	DNA	DNM	PACKING DIMENSIONS			VOLUME (m³)	WEIGHT kg	
			IE2	IE3														L/A	L/B	H		IE2	IE3
NKP-G 32-125.1/102/0.75/2	80	50	234	–	234	112	140	226	100	70	190	140	M10	100	28	50	32	620	370	480	0.110	35	–
NKP-G 32-125.1/115/1.1/2	80	50	234	–	234	112	140	226	100	70	190	140	M10	100	28	50	32	620	370	480	0.110	47	–
NKP-G 32-125.1/125/1.5/2	80	50	247	–	234	112	140	226	100	70	190	140	M10	100	28	50	32	620	370	480	0.110	52	–
NKP-G 32-125.1/140/2.2/2	80	50	272	–	234	112	140	226	100	70	190	140	M10	100	28	50	32	620	370	480	0.110	54	–

NKP-G 32-125- STANDARDISED MONOBLOC CENTRIFUGAL ELECTRIC PUMPS FOR AIR CONDITIONING, REFRIGERATION, IRRIGATION, DECANTING, PRESSURISATION SYSTEMS, AND INDUSTRIAL APPLICATIONS

Pumped liquid temperature range: from -10 °C to +140 °C - **Maximum ambient temperature:** +40°C

≅ 2900 1/min

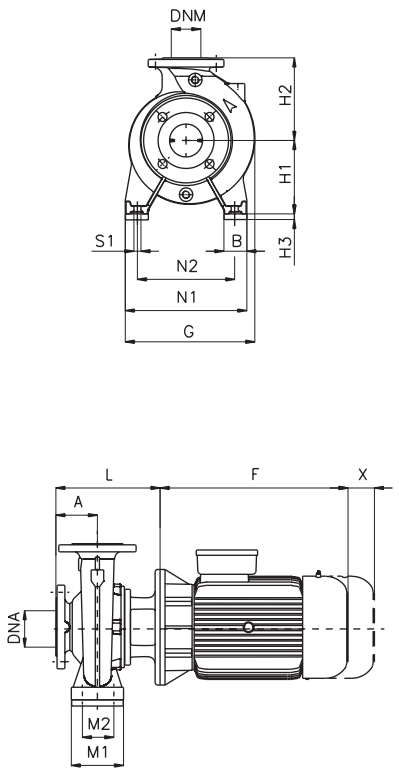

Construction features of the motor: B5

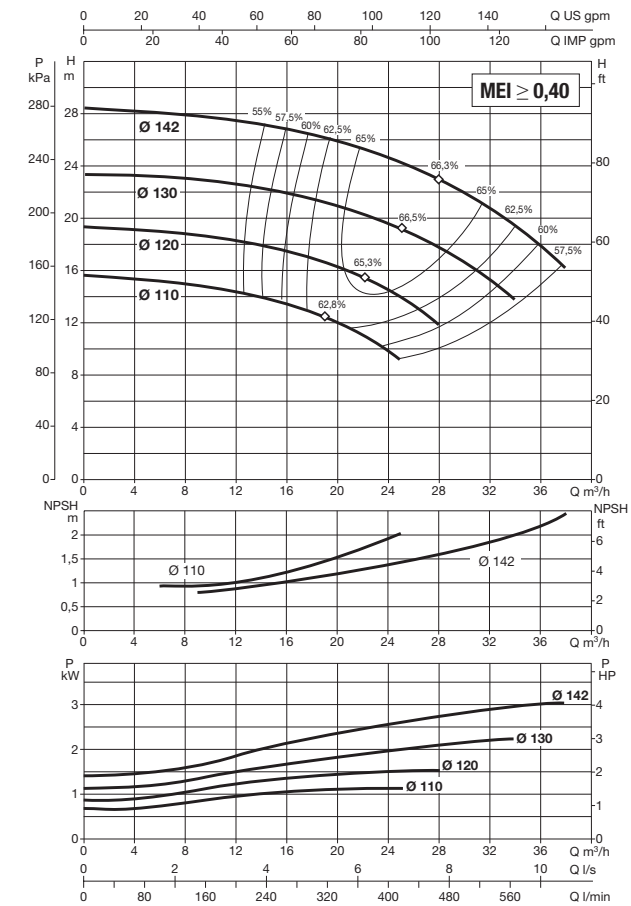

See hydraulic efficiency details on page 291.

The performance curves are based on kinematic viscosity values = 1 mm²/s and density equal to 1000 kg/m³. Curve tolerance according to ISO 9906.

MODEL	ELECTRICAL DATA						
	MOTOR SIZE	POWER INPUT 50 Hz	P2 NOMINAL		In A		MOTOR TYPE
			kW	HP	IE2	IE3	
NKP-G 32-125/110/ 1.1 /2	MEC 80	230/400 V	1.1	1.5	4.07/2.36	–	IE2
NKP-G 32-125/120/ 1.5 /2	MEC 90 S	230/400 V	1.5	2	5.8/3.35	–	IE2
NKP-G 32-125/130/ 2.2 /2	MEC 90 L	230/400 V	2.2	3	8.23/4.75	–	IE2
NKP-G 32-125/142/ 3 /2	MEC 100 L	400 V Δ	3	4	5.85	–	IE2

MODEL	A	B	F		G	H1	H2	L	M1	M2	N1	N2	S1	X	H3	Ø (mm) Mech. seal	DNA	DNM	PACKING DIMENSIONS			VOLUME (m³)	WEIGHT kg	
			IE2	IE3															L/A	L/B	H		IE2	IE3
NKP-G 32-125/110/ 1.1 /2	80	50	234	–	234	112	140	226	100	70	190	140	M10	100	–	28	50	32	620	370	480	0.110	40	–
NKP-G 32-125/120/ 1.5 /2	80	50	247	–	234	112	140	226	100	70	190	140	M10	100	–	28	50	32	620	370	480	0.110	52	–
NKP-G 32-125/130/ 2.2 /2	80	50	272	–	234	112	140	226	100	70	190	140	M10	100	–	28	50	32	620	370	480	0.110	54	–
NKP-G 32-125/142/ 3 /2	80	50	301	–	250	112	140	254	100	70	190	140	M10	100	20	28	50	32	670	420	540	0.152	67	–

NKP-G 32-160.1 - STANDARDISED MONOBLOC CENTRIFUGAL ELECTRIC PUMPS FOR AIR CONDITIONING, REFRIGERATION, IRRIGATION, DECANTING, PRESSURISATION SYSTEMS, AND INDUSTRIAL APPLICATIONS

Pumped liquid temperature range: from -10 °C to +140 °C - **Maximum ambient temperature:** +40°C

≅ 2900 1/min

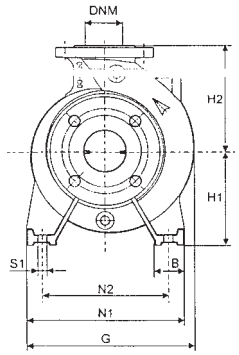

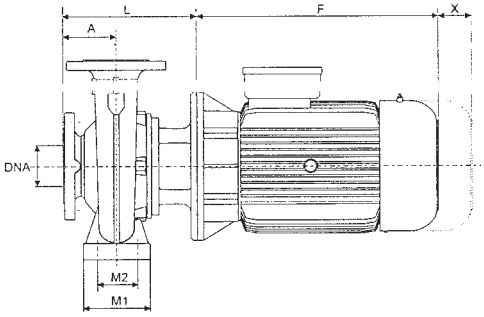

Construction features of the motor: B5

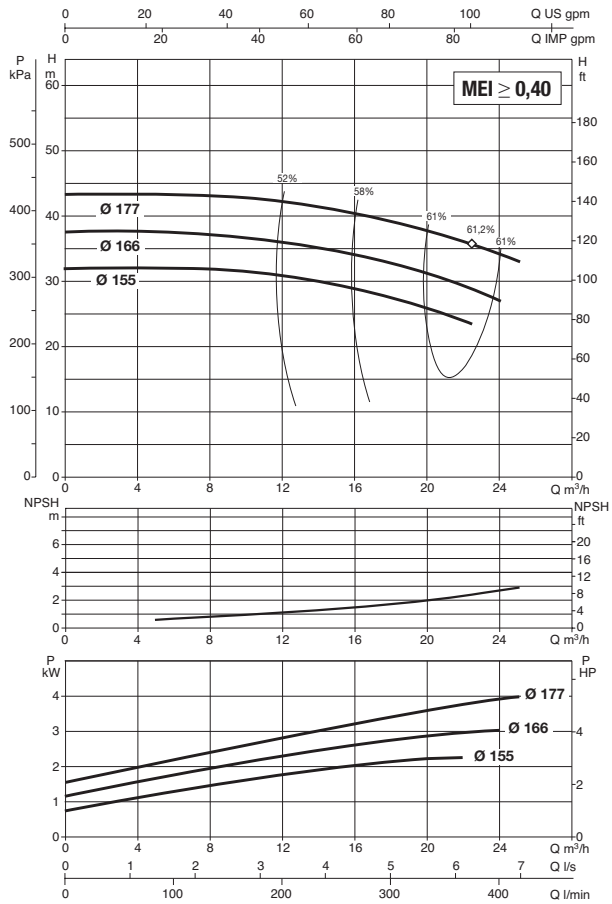

See hydraulic efficiency details on page 291.

The performance curves are based on kinematic viscosity values = 1 mm²/s and density equal to 1000 kg/m³. Curve tolerance according to ISO 9906.

MODEL	ELECTRICAL DATA						
	MOTOR SIZE	POWER INPUT 50 Hz	P2 NOMINAL		In A		MOTOR TYPE
			kW	HP	IE2	IE3	
NKP-G 32-160.1 155/2.2/2	MEC 90 L	230/400 V	2.2	3	8.23/4.75	–	IE2
NKP-G 32-160.1 166/3 /2	MEC 100 L	400 V Δ	3	4	5.85	–	IE2
NKP-G 32-160.1 177/4/2	MEC 112 M	400 V Δ	4	5.5	8.5	–	IE2

MODEL	A	B	F		G	H1	H2	L	M1	M2	N1	N2	S1	X	Ø (mm) Mech. seal	DNA	DNM	PACKING DIMENSIONS			VOLUME (m³)	WEIGHT kg	
			IE2	IE3														L/A	L/B	H		IE2	IE3
NKP-G 32-160.1 155/2.2/2	80	50	272	–	245	132	160	226	100	70	240	190	M10	100	28	50	32	620	370	480	0.110	49	–
NKP-G 32-160.1 166/3 /2	80	50	301	–	250	132	160	254	100	70	240	190	M10	100	28	50	32	670	420	540	0.152	61	–
NKP-G 32-160.1 177/4/2	80	50	301	–	250	132	160	254	100	70	240	190	M10	100	28	50	32	670	420	540	0.152	83	–

NKP-G 32-160- STANDARDISED MONOBLOC CENTRIFUGAL ELECTRIC PUMPS FOR AIR CONDITIONING, REFRIGERATION, IRRIGATION, DECANTING, PRESSURISATION SYSTEMS, AND INDUSTRIAL APPLICATIONS

Pumped liquid temperature range: from -10 °C to +140 °C - **Maximum ambient temperature:** +40°C

≅ 2900 1/min

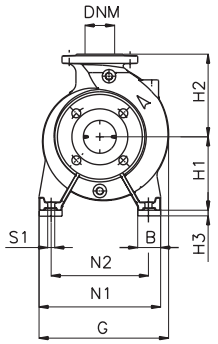

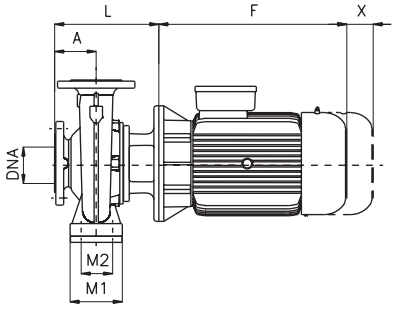

Construction features of the motor: B5

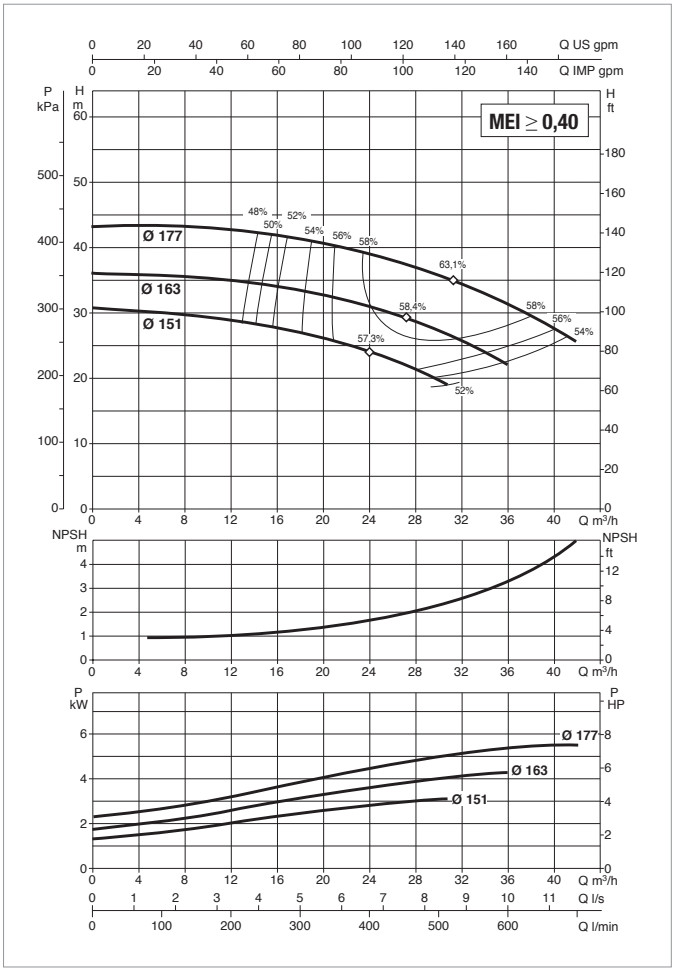

See hydraulic efficiency details on page 291.

The performance curves are based on kinematic viscosity values = 1 mm²/s and density equal to 1000 kg/m³. Curve tolerance according to ISO 9906.

MODEL	ELECTRICAL DATA						
	MOTOR SIZE	POWER INPUT 50 Hz	P2 NOMINAL		In A		MOTOR TYPE
			kW	HP	IE2	IE3	
NKP-G 32-160/151 /3 /2	MEC 100 L	400 V Δ	3	4	5.85	–	IE2
NKP-G 32-160/163 /4 /2	MEC 112 M	400 V Δ	4	5.5	8.05	–	IE2
NKP-G 32-160/177 /5,5/2	MEC 132 S	400 V Δ	5.5	7.5	10.4	–	IE2

MODEL	A	B	F		G	H1	H2	L	M1	M2	N1	N2	S1	H3	X	Ø (mm) Mech. seal	DNA	DNM	PACKING DIMENSIONS			VOLUME (m³)	WEIGHT kg	
			IE2	IE3															L/A	L/B	H		IE2	IE3
NKP-G 32-160/151 /3 /2	80	50	301	–	250	132	160	254	100	70	240	190	M10	–	100	28	50	32	670	420	540	0.152	61	–
NKP-G 32-160/163 /4 /2	80	50	301	–	250	132	160	254	100	70	240	190	M10	–	100	28	50	32	670	420	540	0.152	83	–
NKP-G 32-160/177 /5,5/2	80	50	390	–	300	132	160	293	100	70	240	190	M10	20	100	28	50	32	830	430	520	0.186	105	–

DAB PUMPS reserves the right to make modifications without notice.

NKP-G 32-200.1 - STANDARDISED MONOBLOC CENTRIFUGAL ELECTRIC PUMPS FOR AIR CONDITIONING, REFRIGERATION, IRRIGATION, DECANTING, PRESSURISATION SYSTEMS, AND INDUSTRIAL APPLICATIONS

Pumped liquid temperature range: from -10 °C to +140 °C - **Maximum ambient temperature:** +40°C

≅ 2900 1/min

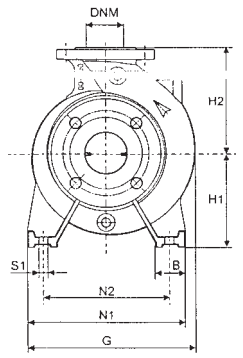

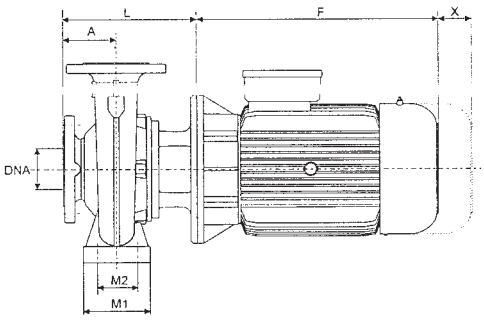

Construction features of the motor: B5

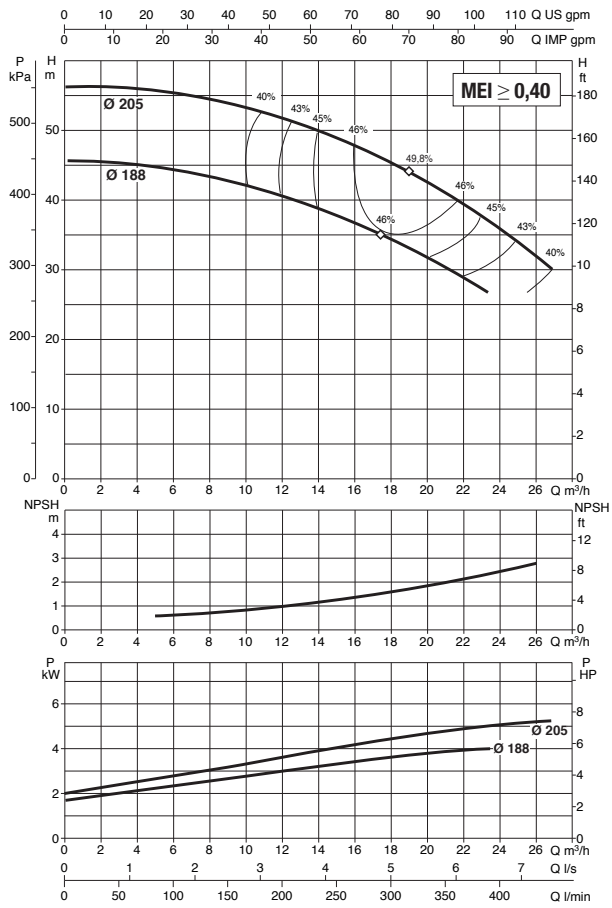

See hydraulic efficiency details on page 291.

The performance curves are based on kinematic viscosity values = 1 mm²/s and density equal to 1000 kg/m³. Curve tolerance according to ISO 9906.

MODEL	ELECTRICAL DATA						
	MOTOR SIZE	POWER INPUT 50 Hz	P2 NOMINAL		In A		MOTOR TYPE
			kW	HP	IE2	IE3	
NKP-G 32-200.1 188/4 /2	MEC 112 M	400 V Δ	4	5.5	8.05	–	IE2
NKP-G 32-200.1 205/5,5/2	MEC 132 S	400 V Δ	5.5	7.5	10.4	–	IE2

MODEL	A	B	F		G	H1	H2	L	M1	M2	N1	N2	S1	X	Ø (mm) Mech. seal	DNA	DNM	PACKING DIMENSIONS			VOLUME (m³)	WEIGHT kg	
			IE2	IE3														L/A	L/B	H		IE2	IE3
NKP-G 32-200.1 188/4 /2	80	50	301	–	279	160	180	254	100	70	240	190	M10	100	28	50	32	670	420	540	0.152	83	–
NKP-G 32-200.1 205/5,5/2	80	50	390	–	300	160	180	293	100	70	240	190	M10	100	28	50	32	830	430	520	0.186	105	–

NKP-G 32-200- STANDARDISED MONOBLOC CENTRIFUGAL ELECTRIC PUMPS FOR AIR CONDITIONING, REFRIGERATION, IRRIGATION, DECANTING, PRESSURISATION SYSTEMS, AND INDUSTRIAL APPLICATIONS

Pumped liquid temperature range: from -10 °C to +140 °C - **Maximum ambient temperature:** +40°C

≅ 2900 1/min

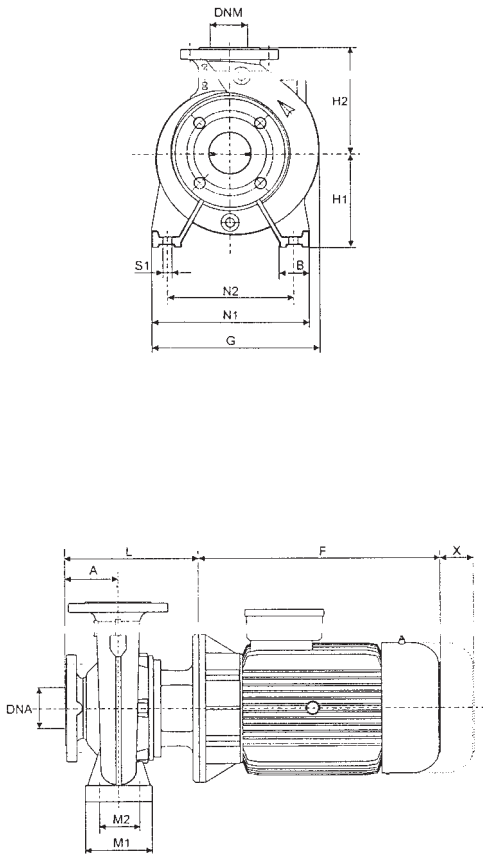

Construction features of the motor: B5

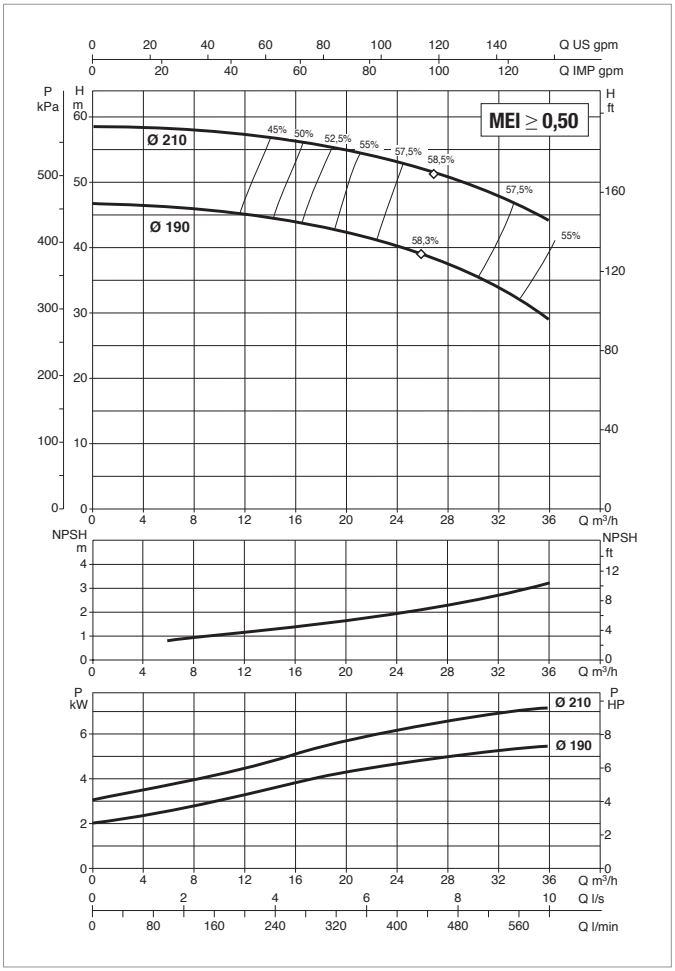

See hydraulic efficiency details on page 291.

The performance curves are based on kinematic viscosity values = 1 mm²/s and density equal to 1000 kg/m³. Curve tolerance according to ISO 9906.

MODEL	ELECTRICAL DATA						
	MOTOR SIZE	POWER INPUT 50 Hz	P2 NOMINAL		In A		MOTOR TYPE
			kW	HP	IE2	IE3	
NKP-G 32-200/190/ 5.5 /2	MEC 132 S	400 V Δ	5.5	7.5	10.4	–	IE2
NKP-G 32-200/210/ 7.5 /2	MEC 132 S	400 V Δ	7.5	10	14	13.4	IE2 / IE3

MODEL	A	B	F		G	H1	H2	L	M1	M2	N1	N2	S1	X	Ø (mm) Mech. seal	DNA	DNM	PACKING DIMENSIONS			VOLUME (m³)	WEIGHT kg	
			IE2	IE3														L/A	L/B	H		IE2	IE3
NKP-G 32-200/190/ 5.5 /2	80	50	390	–	300	160	180	293	100	70	240	190	M10	100	28	50	32	830	430	520	0.186	117	–
NKP-G 32-200/210/ 7.5 /2	80	50	390	437	300	160	180	293	100	70	240	190	M10	100	28	50	32	830	430	520	0.186	88	98

DAB PUMPS reserves the right to make modifications without notice.

NKP-G 40-125- STANDARDISED MONOBLOC CENTRIFUGAL ELECTRIC PUMPS FOR AIR CONDITIONING, REFRIGERATION, IRRIGATION, DECANTING, PRESSURISATION SYSTEMS, AND INDUSTRIAL APPLICATIONS

Pumped liquid temperature range: from -10 °C to +140 °C - **Maximum ambient temperature:** +40°C

≅ 2900 1/min

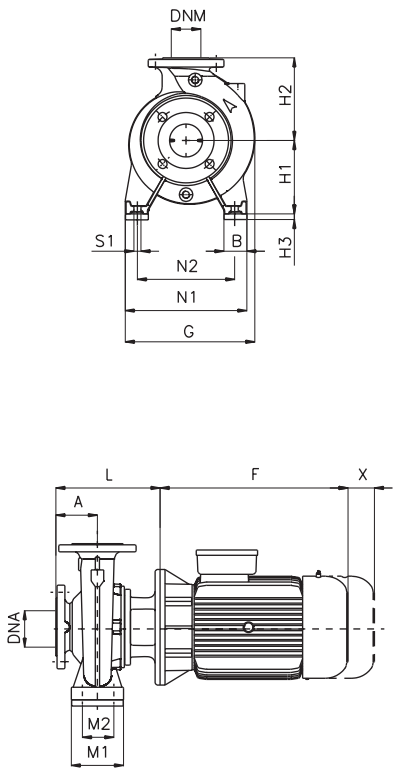

Construction features of the motor: B5

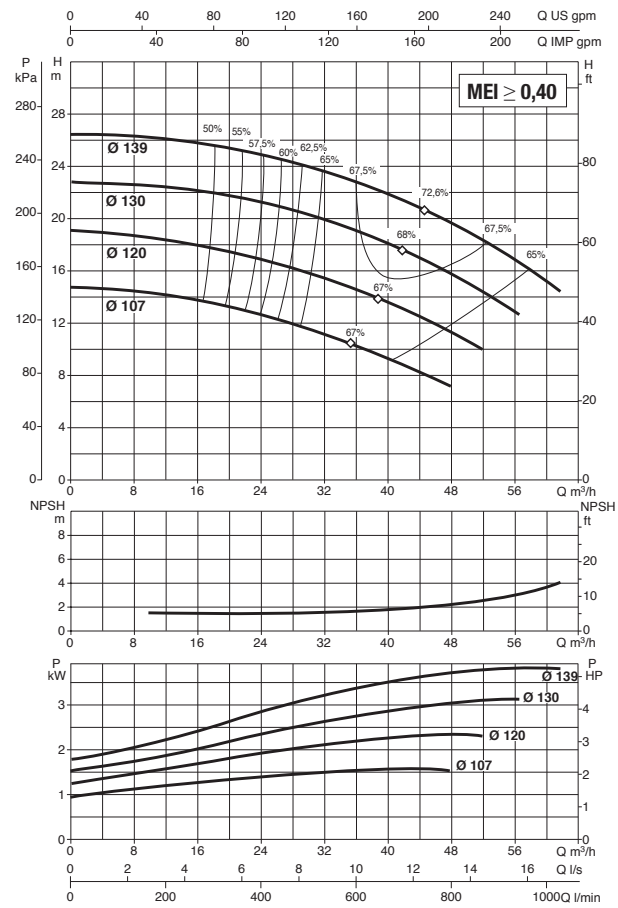

See hydraulic efficiency details on page 291.

The performance curves are based on kinematic viscosity values = 1 mm²/s and density equal to 1000 kg/m³. Curve tolerance according to ISO 9906.

MODEL	ELECTRICAL DATA						
	MOTOR SIZE	POWER INPUT 50 Hz	P2 NOMINAL		In A		MOTOR TYPE
			kW	HP	IE2	IE3	
NKP-G 40-125/107/ 1.5 /2	MEC 90 S	230/400 V	1.5	2	5.8/3.35	–	IE2
NKP-G 40-125/120/ 2.2 /2	MEC 90 L	230/400 V	2.2	3	8.23/4.75	–	IE2
NKP-G 40-125/130/ 3 /2	MEC 100 L	400 V Δ	3	4	5.85	–	IE2
NKP-G 40-125/139/ 4 /2	MEC 112	400 V Δ	4	5.5	8.05	–	IE2

MODEL	A	B	F		G	H1	H2	L	M1	M2	N1	N2	S1	X	H3	Ø (mm) Mech. seal	DNA	DNM	PACKING DIMENSIONS			VOLUME (m³)	WEIGHT kg	
			IE2	IE3															L/A	L/B	H		IE2	IE3
NKP-G 40-125/107/ 1.5 /2	80	50	247	–	234	112	140	226	100	70	210	160	M10	100	–	28	65	40	620	370	480	0.110	57	–
NKP-G 40-125/120/ 2.2 /2	80	50	272	–	234	112	140	226	100	70	210	160	M10	100	–	28	65	40	620	370	480	0.110	70	–
NKP-G 40-125/130/ 3 /2	80	50	301	–	300	112	140	254	100	70	210	160	M10	100	20	28	65	40	670	420	540	0.152	76	–
NKP-G 40-125/139/ 4 /2	80	50	301	–	300	112	140	254	100	70	210	160	M10	100	20	28	65	40	670	420	540	0.152	98	–

NKP-G 40-160- STANDARDISED MONOBLOC CENTRIFUGAL ELECTRIC PUMPS FOR AIR CONDITIONING, REFRIGERATION, IRRIGATION, DECANTING, PRESSURISATION SYSTEMS, AND INDUSTRIAL APPLICATIONS

Pumped liquid temperature range: from -10 °C to +140 °C - **Maximum ambient temperature:** +40°C

≅ 2900 1/min

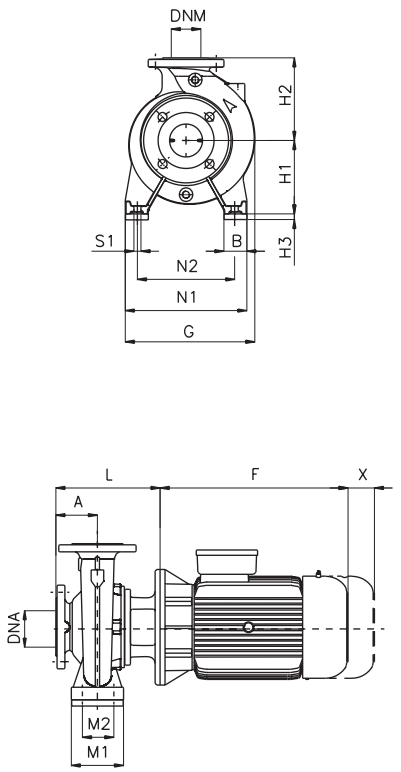

Construction features of the motor: B5

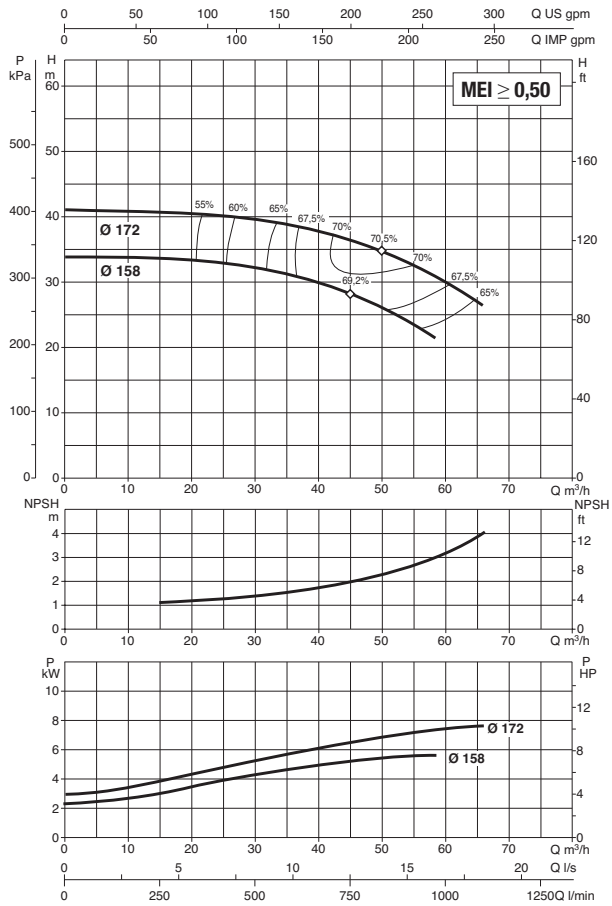

See hydraulic efficiency details on page 291.

The performance curves are based on kinematic viscosity values = 1 mm²/s and density equal to 1000 kg/m³. Curve tolerance according to ISO 9906.

MODEL	ELECTRICAL DATA						
	MOTOR SIZE	POWER INPUT 50 Hz	P2 NOMINAL		In A		MOTOR TYPE
			kW	HP	IE2	IE3	
NKP-G 40-160/158/ 5,5 /2	MEC 132 S	400 V Δ	5.5	7.5	10.4	–	IE2
NKP-G 40-160/172/ 7,5 /2	MEC 132 S	400 V Δ	7.5	10	14	13.4	IE2 / IE3

MODEL	A	B	F		G	H1	H2	L	M1	M2	N1	N2	S1	X	H3	Ø (mm) Mech. seal	DNA	DNM	PACKING DIMENSIONS			VOLUME (m^3)	WEIGHT kg	
			IE2	IE3															L/A	L/B	H		IE2	IE3
NKP-G 40-160/158/ 5,5 /2	80	50	390	–	300	132	160	293	100	70	240	190	M10	100	20	28	65	40	830	430	520	0.186	110	–
NKP-G 40-160/172/ 7,5 /2	80	50	390	437	300	132	160	293	100	70	240	190	M10	100	20	28	65	40	830	430	520	0.186	114	90

NKP-G 40-200- STANDARDISED MONOBLOC CENTRIFUGAL ELECTRIC PUMPS FOR AIR CONDITIONING, REFRIGERATION, IRRIGATION, DECANTING, PRESSURISATION SYSTEMS, AND INDUSTRIAL APPLICATIONS

Pumped liquid temperature range: from -10 °C to +140 °C - **Maximum ambient temperature:** +40°C

≅ 2900 1/min

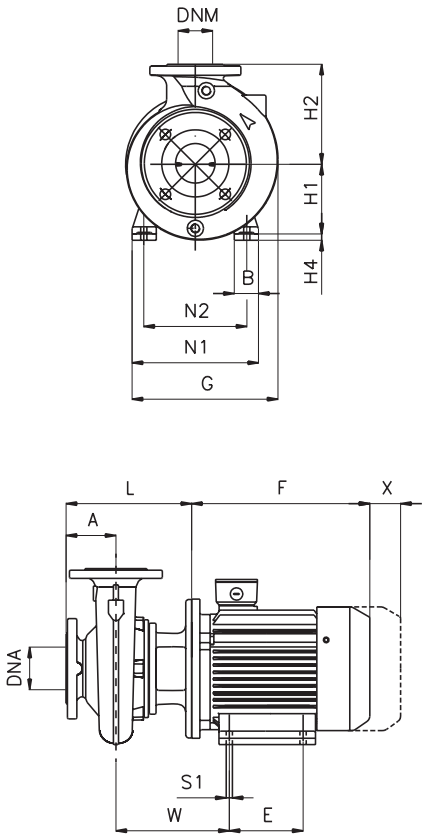

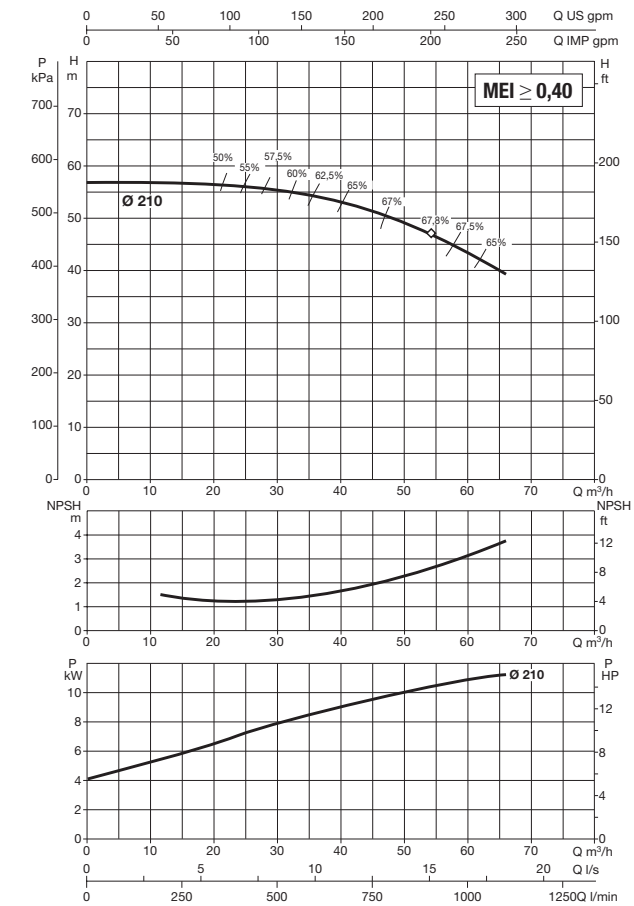

See hydraulic efficiency details on page 291.

The performance curves are based on kinematic viscosity values = 1 mm²/s and density equal to 1000 kg/m³. Curve tolerance according to ISO 9906.

MODEL	ELECTRICAL DATA						
	MOTOR SIZE	POWER INPUT 50 Hz	P2 NOMINAL		In A		MOTOR TYPE
			kW	HP	IE2	IE3	
NKP-G 40-200/210/11 /2	MEC 160 M	400 V Δ	11	15	20.2	19.4	IE2 / IE3

MODEL	A	B	E	F		G	H1	H2	L	N1	N2	S1	W	X	H4	Ø (mm) Mech. seal	DNA	DNM	PACKING DIMENSIONS			VOLUME (m^3)	WEIGHT kg	
				IE2	IE3														L/A	L/B	H		IE2	IE3
NKP-G 40-200/210/11 /2	100	67	210	505	505	350	160	180	343	314	254	M12	351	100	20	28	65	40	1030	530	640	0.349	127	170

NKP-G 40-250- STANDARDISED MONOBLOC CENTRIFUGAL ELECTRIC PUMPS FOR AIR CONDITIONING, REFRIGERATION, IRRIGATION, DECANTING, PRESSURISATION SYSTEMS, AND INDUSTRIAL APPLICATIONS

Pumped liquid temperature range: from -10 °C to +140 °C - **Maximum ambient temperature:** +40°C

≅ 2900 1/min

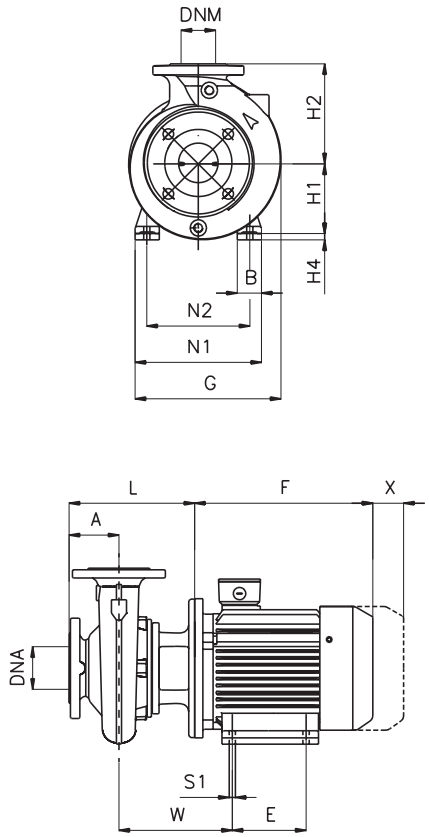

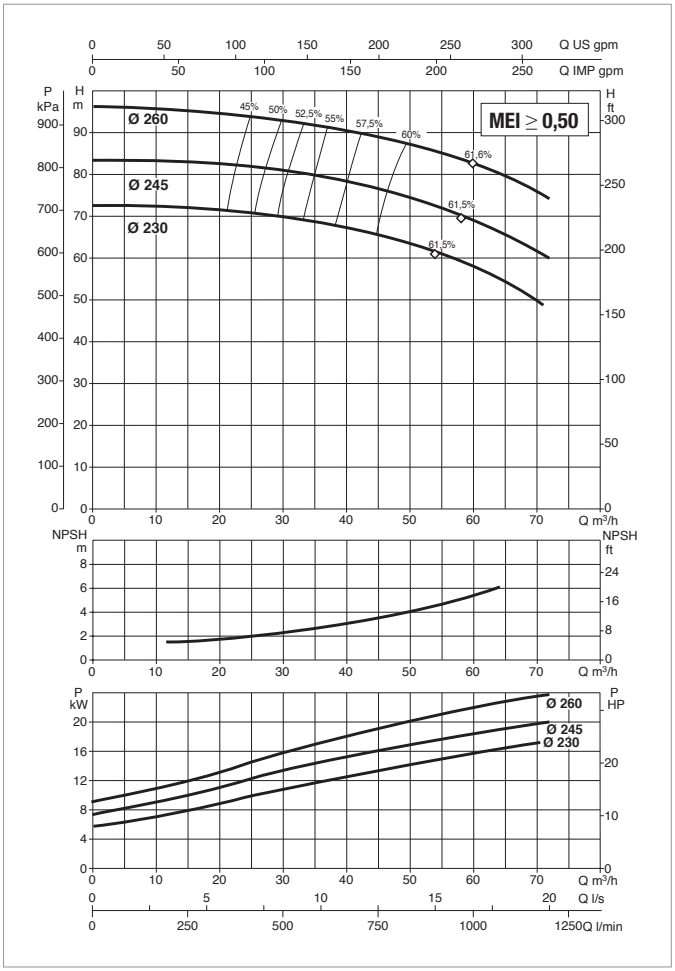

See hydraulic efficiency details on page 291.

The performance curves are based on kinematic viscosity values = 1 mm²/s and density equal to 1000 kg/m³. Curve tolerance according to ISO 9906.

MODEL	ELECTRICAL DATA						
	MOTOR SIZE	POWER INPUT 50 Hz	P2 NOMINAL		In A		MOTOR TYPE
			kW	HP	IE2	IE3	
NKP-G 40-250/230/15 /2	MEC 160 M	400 V Δ	15	20	27	26.5	IE2 / IE3
NKP-G 40-250/245/18.5 /2	MEC 160 L	400 V Δ	18.5	25	33	32	IE2 / IE3
NKP-G 40-250/260/22 /2	MEC 180 M	400 V Δ	22	30	39.5	38	IE2 / IE3

MODEL	A	B	E	F		G	H1	H2	L	M1	M2	N1	N2	S1	W	X	H4	Ø (mm) Mech. seal	DNA	DNM	PACKING DIMENSIONS			VOLUME (m³)	WEIGHT kg	
				IE2	IE3																L/A	L/B	H		IE2	IE3
NKP-G 40-250/230/15 /2	100	67	210	505	505	350	160	225	343	–	–	314	254	M12	351	100	20	28	65	40	1030	530	640	0.349	142	180
NKP-G 40-250/245/18.5 /2	100	67	254	560	549	350	160	225	343	–	–	314	254	M12	351	100	20	28	65	40	1030	530	640	0.349	177	192
NKP-G 40-250/260/22 /2	100	74	241	580	580	350	180	225	343	–	–	345	279	M12	364	100	–	28	65	40	1030	530	640	0.349	182	223

NKP-G 50-125- STANDARDISED MONOBLOC CENTRIFUGAL ELECTRIC PUMPS FOR AIR CONDITIONING, REFRIGERATION, IRRIGATION, DECANTING, PRESSURISATION SYSTEMS, AND INDUSTRIAL APPLICATIONS

Pumped liquid temperature range: from -10 °C to +140 °C - **Maximum ambient temperature:** +40°C

≅ 2900 1/min

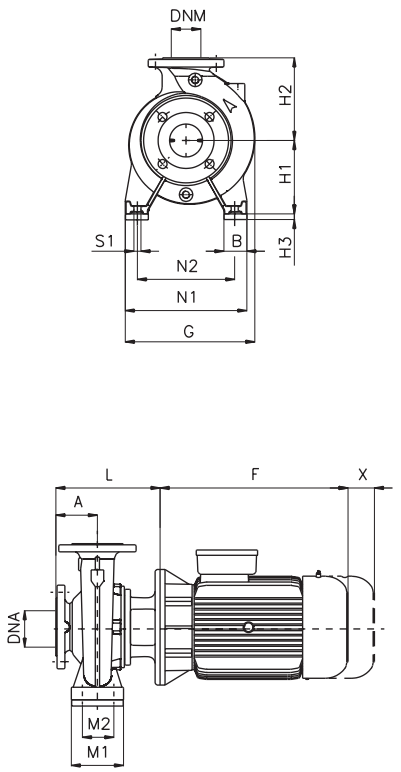

Construction features of the motor: B5

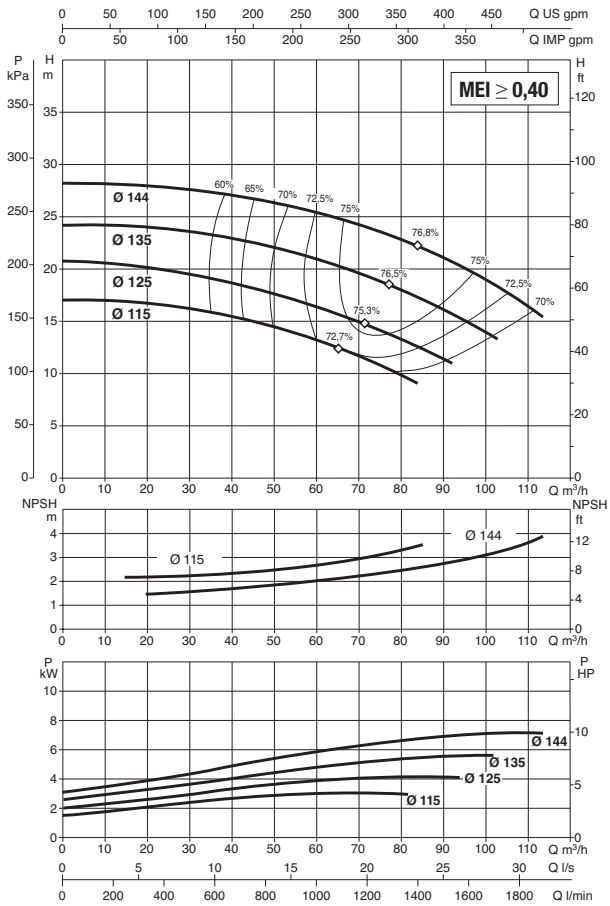

See hydraulic efficiency details on page 291.

The performance curves are based on kinematic viscosity values = 1 mm²/s and density equal to 1000 kg/m³. Curve tolerance according to ISO 9906.

MODEL	ELECTRICAL DATA						
	MOTOR SIZE	POWER INPUT 50 Hz	P2 NOMINAL		In A		MOTOR TYPE
			kW	HP	IE2	IE3	
NKP-G 50-125/115/ 3 /2	MEC 100 L	400 V Δ	3	4	5.85	–	IE2
NKP-G 50-125/125/ 4 /2	MEC 112 M	400 V Δ	4	5.5	8.05	–	IE2
NKP-G 50-125/135/ 5,5 /2	MEC 132 S	400 V Δ	5.5	7.5	10.4	–	IE2
NKP-G 50-125/144/ 7,5 /2	MEC 132 S	400 V Δ	7.5	10	14	13.4	IE2 / IE3

MODEL	A	B	F		G	H1	H2	L	M1	M2	N1	N2	S1	X	H3	Ø (mm) Mech. seal	DNA	DNM	PACKING DIMENSIONS			VOLUME (m³)	WEIGHT kg	
			IE2	IE3															L/A	L/B	H		IE2	IE3
NKP-G 50-125/115/ 3 /2	100	50	301	–	251	132	160	274	100	70	240	190	M10	100	–	28	65	50	670	420	540	0.152	78	–
NKP-G 50-125/125/ 4 /2	100	50	301	–	251	132	160	274	100	70	240	190	M10	100	–	28	65	50	670	420	540	0.152	113	–
NKP-G 50-125/135/ 5,5 /2	100	50	390	–	300	132	160	313	100	70	240	190	M10	100	20	28	65	50	830	430	520	0.186	115	–
NKP-G 50-125/144/ 7,5 /2	100	50	390	437	300	132	160	313	100	70	240	190	M10	100	20	28	65	50	830	430	520	0.186	87	96

NKP-G 50-160- STANDARDISED MONOBLOC CENTRIFUGAL ELECTRIC PUMPS FOR AIR CONDITIONING, REFRIGERATION, IRRIGATION, DECANTING, PRESSURISATION SYSTEMS, AND INDUSTRIAL APPLICATIONS

Pumped liquid temperature range: from -10 °C to +140 °C - **Maximum ambient temperature:** +40°C

≅ 2900 1/min

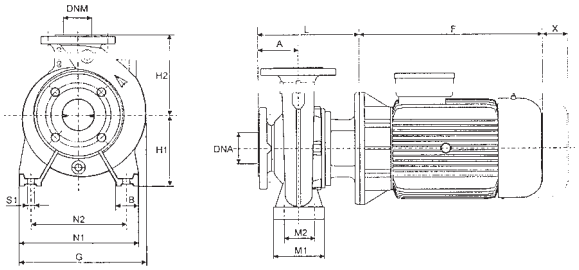

Construction features of the motor: B5

NKP-G 50-160/153/7.5/2

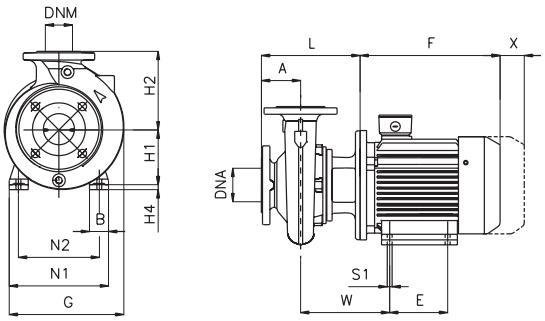

NKM-G 80
NKP-G 50-160/169/11/2

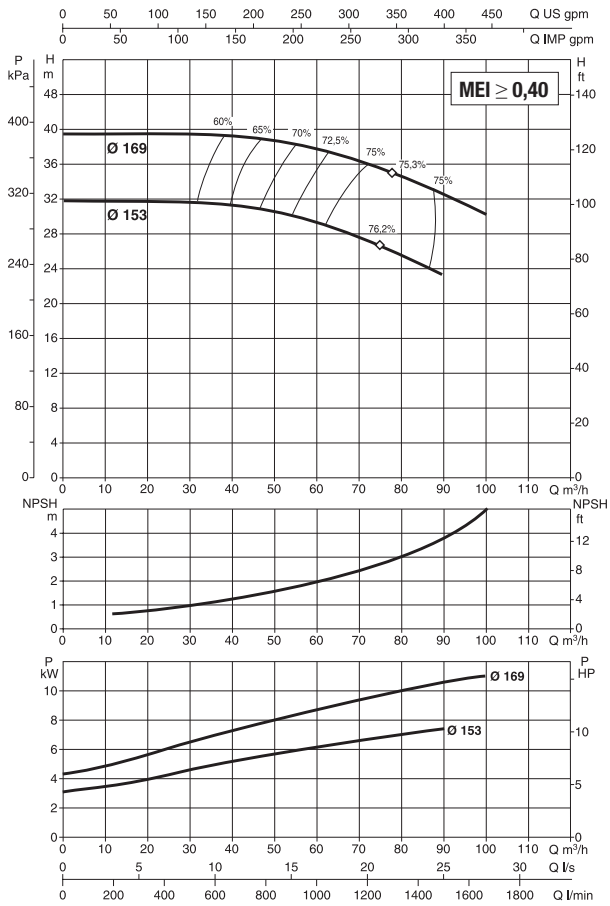

See hydraulic efficiency details on page 291.

The performance curves are based on kinematic viscosity values = 1 mm²/s and density equal to 1000 kg/m³. Curve tolerance according to ISO 9906.

MODEL	ELECTRICAL DATA						
	MOTOR SIZE	POWER INPUT 50 Hz	P2 NOMINAL		In A		MOTOR TYPE
			kW	HP	IE2	IE3	
NKP-G 50-160/153/ 7.5 /2	MEC 132 S	400 V Δ	7.5	10	14	13.4	IE2 / IE3
NKP-G 50-160/169/11 /2	MEC 160 M	400 V Δ	11	15	20.2	19.4	IE2 / IE3

MODEL	A	B	E	F		G	H1	H2	L	M1	M2	N1	N2	S1	W	X	H4	Ø (mm) Mech. seal	DNA	DNM	PACKING DIMENSIONS			VOL. (m³)	WEIGHT kg	
				IE2	IE3																L/A	L/B	H		IE2	IE3
NKP-G 50-160/153/ 7.5 /2	100	50	–	390	437	300	160	180	313	100	70	265	212	M10	–	100	–	28	65	50	1030	530	640	0.349	94	64
NKP-G 50-160/169/11 /2	100	67	210	505	505	350	160	180	343	–	–	314	254	M12	351	100	20	28	65	50	1030	530	640	0.349	115	96

DAB PUMPS reserves the right to make modifications without notice.

NKP-G 50-200- STANDARDISED MONOBLOC CENTRIFUGAL ELECTRIC PUMPS FOR AIR CONDITIONING, REFRIGERATION, IRRIGATION, DECANTING, PRESSURISATION SYSTEMS, AND INDUSTRIAL APPLICATIONS

Pumped liquid temperature range: from -10 °C to +140 °C - **Maximum ambient temperature:** +40°C

≅ 2900 1/min

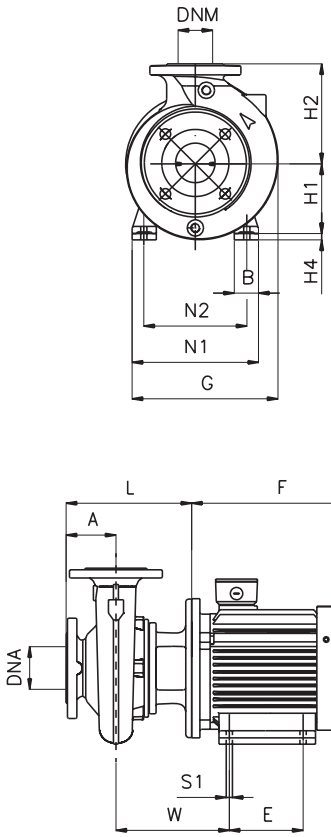

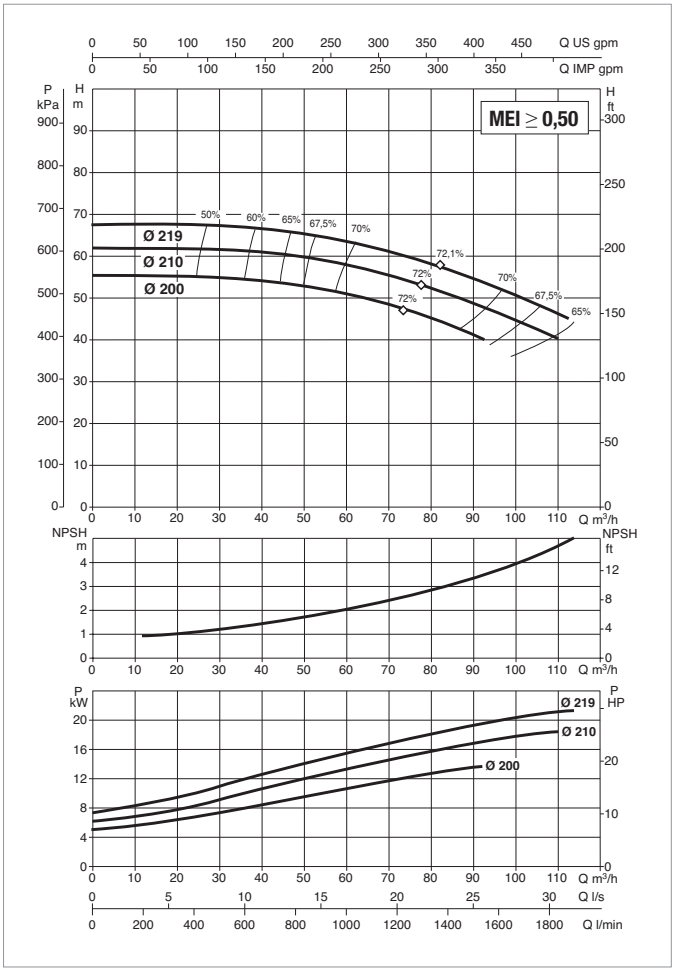

See hydraulic efficiency details on page 291.

The performance curves are based on kinematic viscosity values = 1 mm²/s and density equal to 1000 kg/m³. Curve tolerance according to ISO 9906.

MODEL	ELECTRICAL DATA						
	MOTOR SIZE	POWER INPUT 50 Hz	P2 NOMINAL		In A		MOTOR TYPE
			kW	HP	IE2	IE3	
NKP-G 50-200/200/15 /2	MEC 160 M	400 V Δ	15	20	27	26.5	IE2 / IE3
NKP-G 50-200/210/18.5 /2	MEC 160 L	400 V Δ	18.5	25	33	32	IE2 / IE3
NKP-G 50-200/219/22 /2	MEC 180 M	400 V Δ	22	30	39.5	38	IE2 / IE3

MODEL	A	B	E	F		G	H1	H2	L	N1	N2	S1	W	X	H4	Ø (mm) Mech. seal	DNA	DNM	PACKING DIMENSIONS			VOLUME (m^3)	WEIGHT kg	
				IE2	IE3														L/A	L/B	H		IE2	IE3
NKP-G 50-200/200/15 /2	100	67	210	505	505	350	160	200	343	314	254	M12	351	100	20	28	65	50	1030	530	640	0.349	138	176
NKP-G 50-200/210/18.5 /2	100	67	254	560	549	350	160	200	343	314	254	M12	351	100	20	28	65	50	1030	530	640	0.349	166	187
NKP-G 50-200/219/22 /2	100	74	241	580	580	350	160	200	343	345	279	M12	364	100	–	28	65	50	1030	530	640	0.349	179	218

NKP-G 50-250- STANDARDISED MONOBLOC CENTRIFUGAL ELECTRIC PUMPS FOR AIR CONDITIONING, REFRIGERATION, IRRIGATION, DECANTING, PRESSURISATION SYSTEMS, AND INDUSTRIAL APPLICATIONS

Pumped liquid temperature range: from -10 °C to +140 °C - **Maximum ambient temperature:** +40°C

≅ 2900 1/min

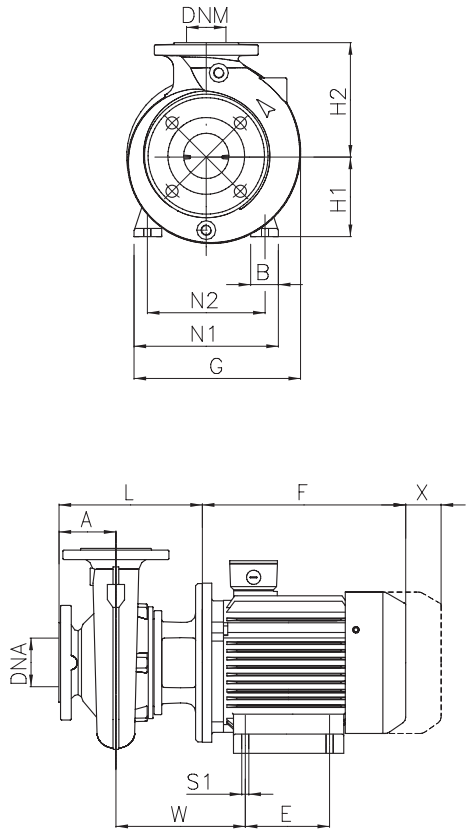

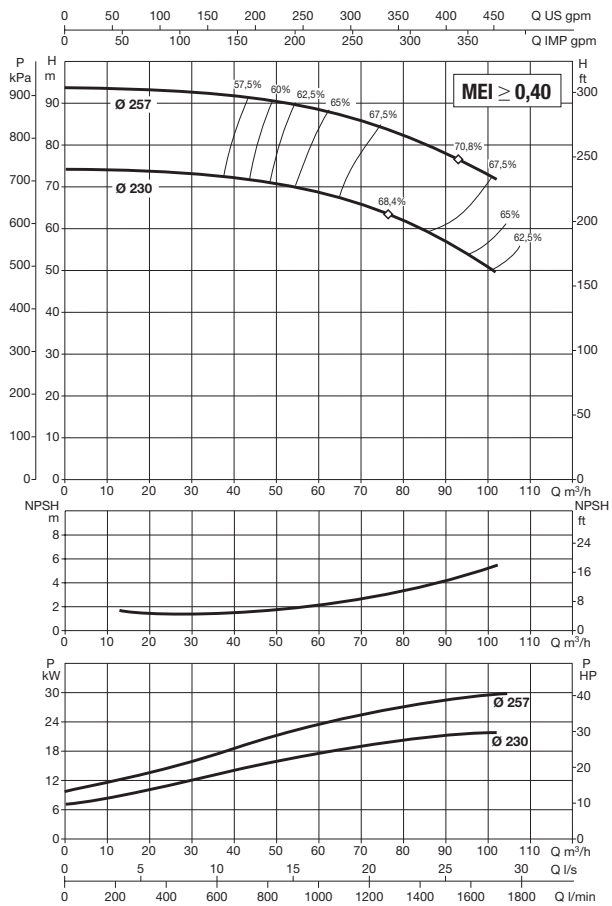

See hydraulic efficiency details on page 291.

The performance curves are based on kinematic viscosity values = 1 mm²/s and density equal to 1000 kg/m³. Curve tolerance according to ISO 9906.

MODEL	ELECTRICAL DATA						
	MOTOR SIZE	POWER INPUT 50 Hz	P2 NOMINAL		In A		MOTOR TYPE
			kW	HP	IE2	IE3	
NKP-G 50-250/230/22 /2	MEC 180 M	400 V Δ	22	30	39.5	38	IE2 / IE3
NKP-G 50-250/257/30 /2	MEC 200 L	400 V Δ	30	40	52	52	IE2 / IE3

MODEL	A	B	E	F		G	H1	H2	L	N1	N2	S1	W	X	Ø (mm) Mech. seal	DNA	DNM	PACKING DIMENSIONS			VOLUME (m³)	WEIGHT kg	
				IE2	IE3													L/A	L/B	H		IE2	IE3
NKP-G 50-250/230/22 /2	100	74	241	580	580	350	180	225	343	345	279	M12	364	100	28	65	50	1030	530	640	0.349	182	223
NKP-G 50-250/257/30 /2	100	85	305	660	670	400	200	225	343	388	318	M14	376	100	28	65	50	1130	580	740	0.485	325	351

DAB PUMPS reserves the right to make modifications without notice.

NKP-G 65-125- STANDARDISED MONOBLOC CENTRIFUGAL ELECTRIC PUMPS FOR AIR CONDITIONING, REFRIGERATION, IRRIGATION, DECANTING, PRESSURISATION SYSTEMS, AND INDUSTRIAL APPLICATIONS

Pumped liquid temperature range: from -10 °C to +140 °C - **Maximum ambient temperature:** +40°C

≅ 2900 1/min

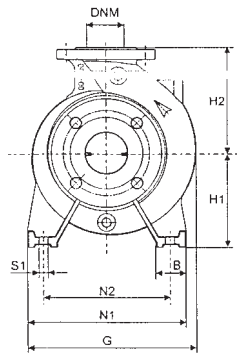

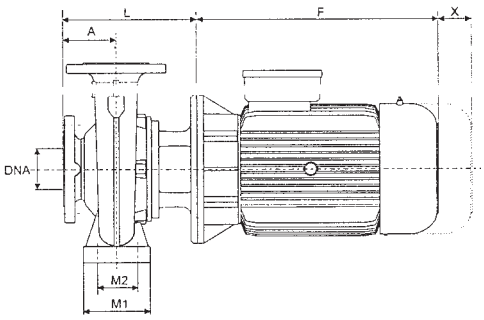

Construction features of the motor: B5

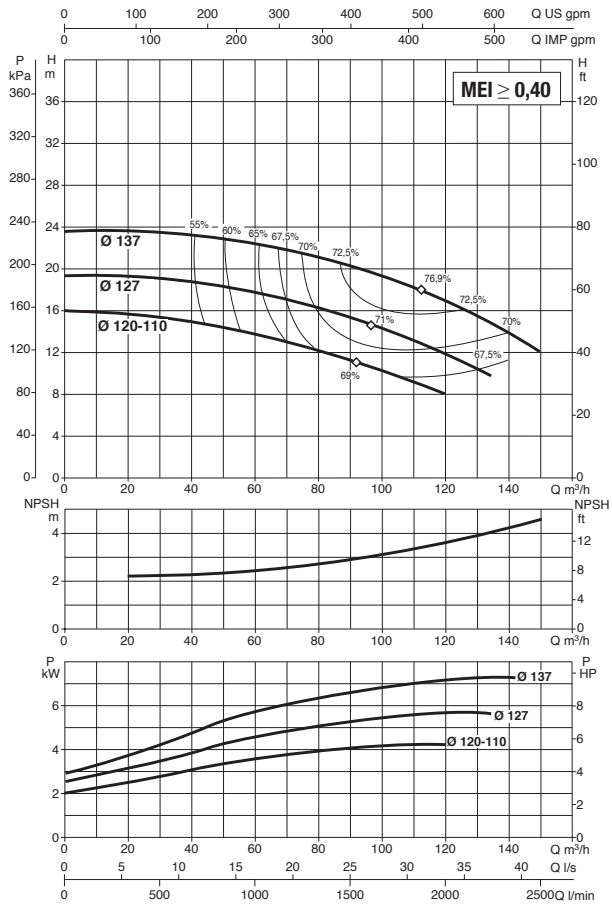

See hydraulic efficiency details on page 291.

The performance curves are based on kinematic viscosity values = 1 mm²/s and density equal to 1000 kg/m³. Curve tolerance according to ISO 9906.

MODEL	ELECTRICAL DATA						
	MOTOR SIZE	POWER INPUT 50 Hz	P2 NOMINAL		In A		MOTOR TYPE
			kW	HP	IE2	IE3	
NKP-G 65-125/120-110/4/2	MEC 112	400 V Δ	4	5.5	8.05	–	IE2
NKP-G 65-125/127/ 5.5 /2	MEC 132 S	400 V Δ	5.5	7.5	10.4	–	IE2
NKP-G 65-125/137/ 7.5 /2	MEC 132 S	400 V Δ	7.5	10	14	13.4	IE2 / IE3

MODEL	A	B	F		G	H1	H2	L	M1	M2	N1	N2	S1	X	Ø (mm) Mech. seal	DNA	DNM	PACKING DIMENSIONS			VOLUME (m³)	WEIGHT kg	
			IE2	IE3														L/A	L/B	H		IE2	IE3
NKP-G 65-125/120-110/4/2	100	65	301	–	286	160	180	274	125	95	280	212	M10	100	28	80	65	670	420	540	0.152	104	–
NKP-G 65-125/127/ 5.5 /2	100	65	390	–	300	160	180	313	125	95	280	212	M10	100	28	80	65	830	430	520	0.186	113	–
NKP-G 65-125/137/ 7.5 /2	100	65	390	437	300	160	180	313	125	95	280	212	M10	100	28	80	65	830	430	520	0.186	91	94

NKP-G 65-160- STANDARDISED MONOBLOC CENTRIFUGAL ELECTRIC PUMPS FOR AIR CONDITIONING, REFRIGERATION, IRRIGATION, DECANTING, PRESSURISATION SYSTEMS, AND INDUSTRIAL APPLICATIONS

Pumped liquid temperature range: from -10 °C to +140 °C - **Maximum ambient temperature:** +40°C

≅ 2900 1/min

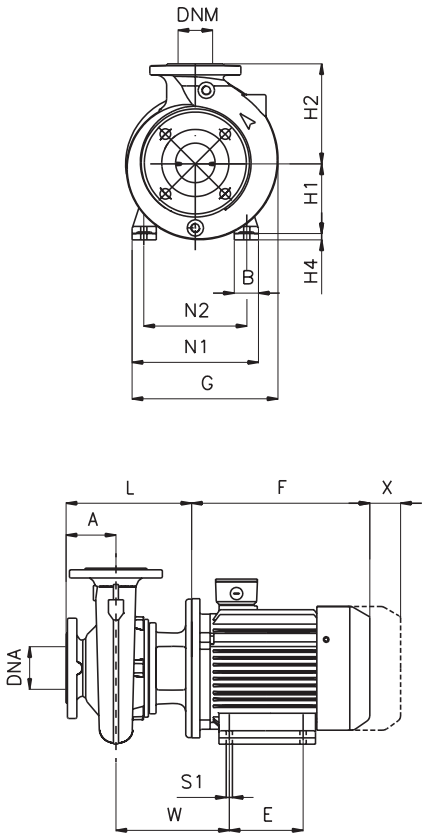

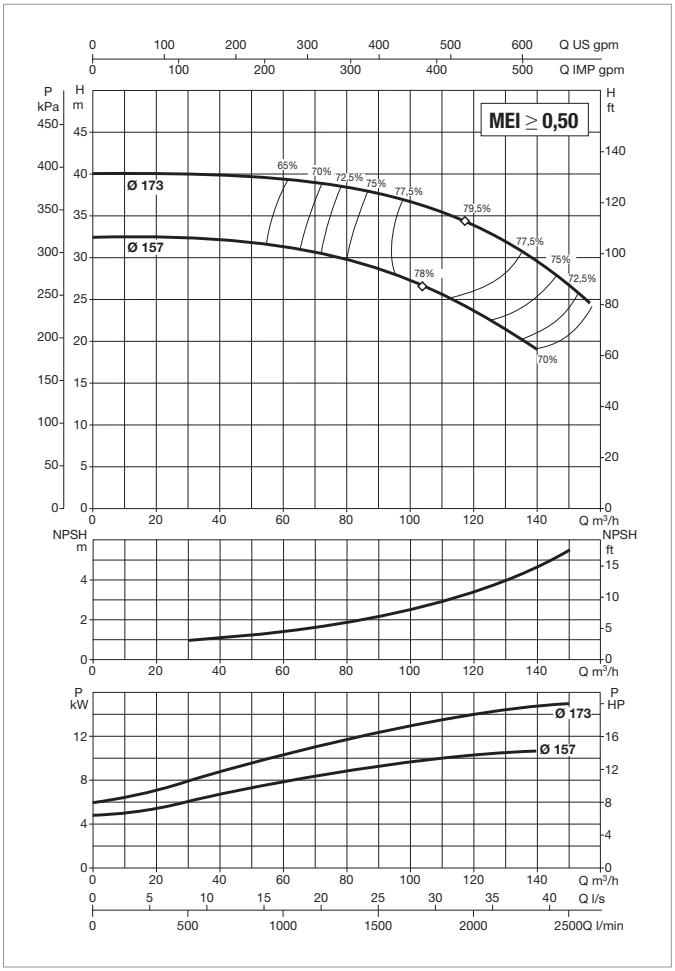

See hydraulic efficiency details on page 291.

The performance curves are based on kinematic viscosity values = 1 mm²/s and density equal to 1000 kg/m³. Curve tolerance according to ISO 9906.

MODEL	ELECTRICAL DATA						
	MOTOR SIZE	POWER INPUT 50 Hz	P2 NOMINAL		In A		MOTOR TYPE
			kW	HP	IE2	IE3	
NKP-G 65-160/157/11 /2	MEC 160 M	400 V Δ	11	15	20.2	19.4	IE2 / IE3
NKP-G 65-160/173/15 /2	MEC 160 M	400 V Δ	15	20	27	26.5	IE2 / IE3

MODEL	A	B	E	F		G	H1	H2	L	N1	N2	S1	W	X	H4	Ø (mm) Mech. seal	DNA	DNM	PACKING DIMENSIONS			VOLUME (m³)	WEIGHT kg	
				IE2	IE3														L/A	L/B	H		IE2	IE3
NKP-G 65-160/157/11 /2	100	67	210	505	505	350	160	200	343	314	254	M12	351	100	20	28	80	65	1030	530	640	0.349	122	166
NKP-G 65-160/173/15 /2	100	67	210	505	505	350	160	200	343	314	254	M12	351	100	20	28	80	65	1030	530	640	0.349	134	172

NKP-G 65-200- STANDARDISED MONOBLOC CENTRIFUGAL ELECTRIC PUMPS FOR AIR CONDITIONING, REFRIGERATION, IRRIGATION, DECANTING, PRESSURISATION SYSTEMS, AND INDUSTRIAL APPLICATIONS

Pumped liquid temperature range: from -10 °C to +140 °C - **Maximum ambient temperature:** +40°C

≅ 2900 1/min

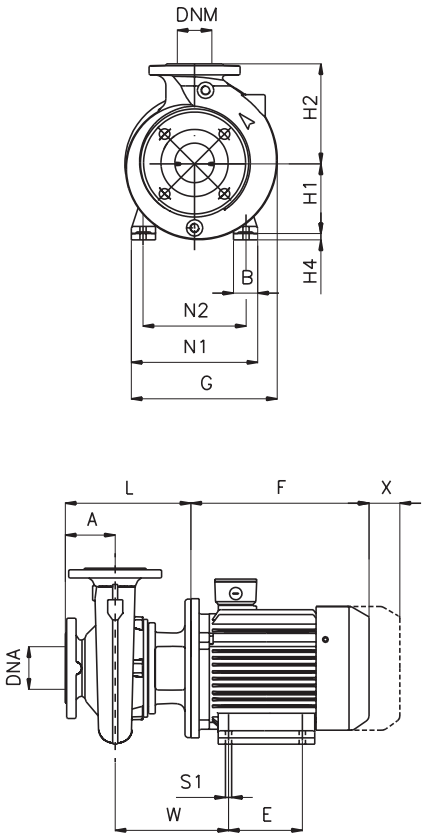

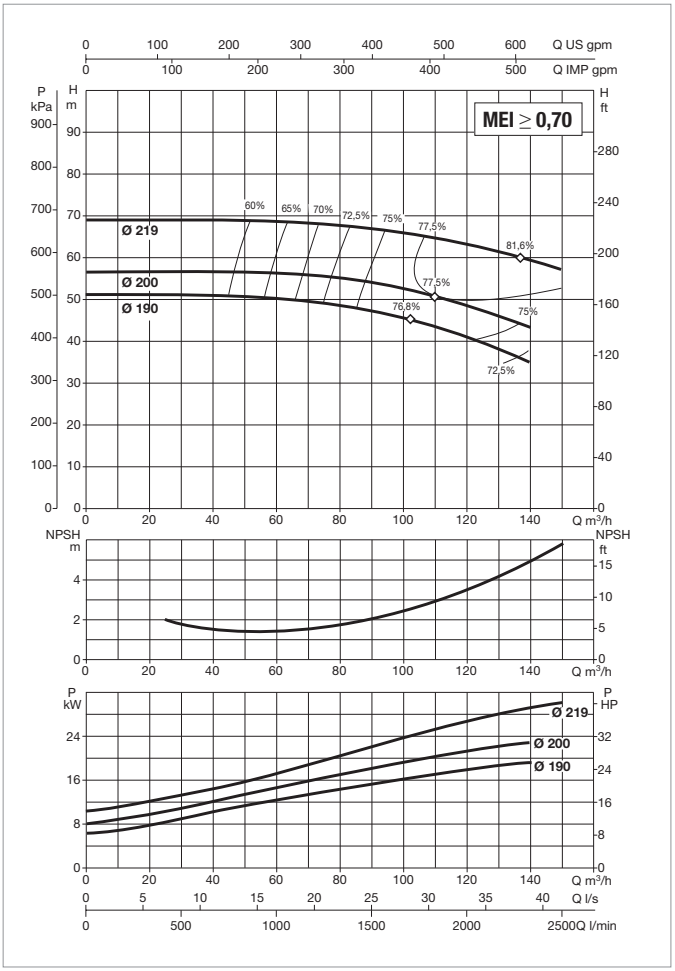

See hydraulic efficiency details on page 291.

The performance curves are based on kinematic viscosity values = 1 mm²/s and density equal to 1000 kg/m³. Curve tolerance according to ISO 9906.

MODEL	ELECTRICAL DATA						
	MOTOR SIZE	POWER INPUT 50 Hz	P2 NOMINAL		In A		MOTOR TYPE
			kW	HP	IE2	IE3	
NKP-G 65-200/190/18.5 /2	MEC 160 L	400 V Δ	18.5	25	33	32	IE2 / IE3
NKP-G 65-200/200/22 /2	MEC 180 M	400 V Δ	22	30	39.5	38	IE2 / IE3
NKP-G 65-200/219/30 /2	MEC 200 L	400 V Δ	30	40	52	52	IE2 / IE3

MODEL	A	B	E	F		G	H1	H2	L	N1	N2	S1	W	X	H4	Ø (mm) Mech. seal	DNA	DNM	PACKING DIMENSIONS			VOLUME (m³)	WEIGHT kg	
				IE2	IE3														L/A	L/B	H		IE2	IE3
NKP-G 65-200/190/18.5 /2	100	67	254	560	549	350	160	225	343	314	254	M12	351	100	20	28	80	65	1030	530	640	0.349	165	192
NKP-G 65-200/200/22 /2	100	74	241	580	580	350	180	225	343	345	279	M12	364	100	–	28	80	65	1030	530	640	0.349	183	223
NKP-G 65-200/219/30 /2	100	85	305	660	670	400	200	225	343	388	318	M14	376	100	–	28	80	65	1130	580	740	0.485	234	351

DAB PUMPS reserves the right to make modifications without notice.

NKP-G 80-160- STANDARDISED MONOBLOC CENTRIFUGAL ELECTRIC PUMPS FOR AIR CONDITIONING, REFRIGERATION, IRRIGATION, DECANTING, PRESSURISATION SYSTEMS, AND INDUSTRIAL APPLICATIONS

Pumped liquid temperature range: from -10 °C to +140 °C - **Maximum ambient temperature:** +40°C

≅ 2900 1/min

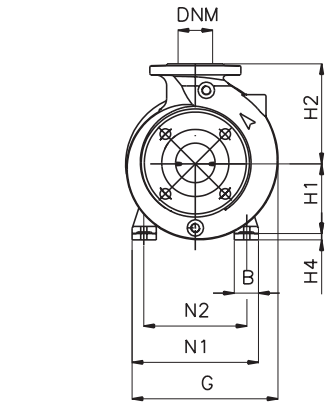

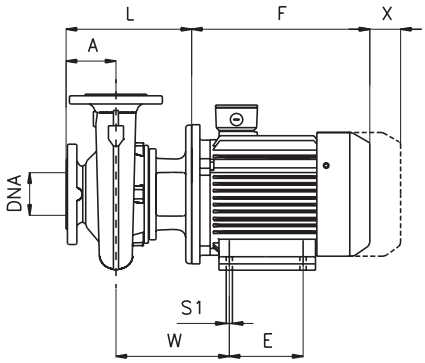

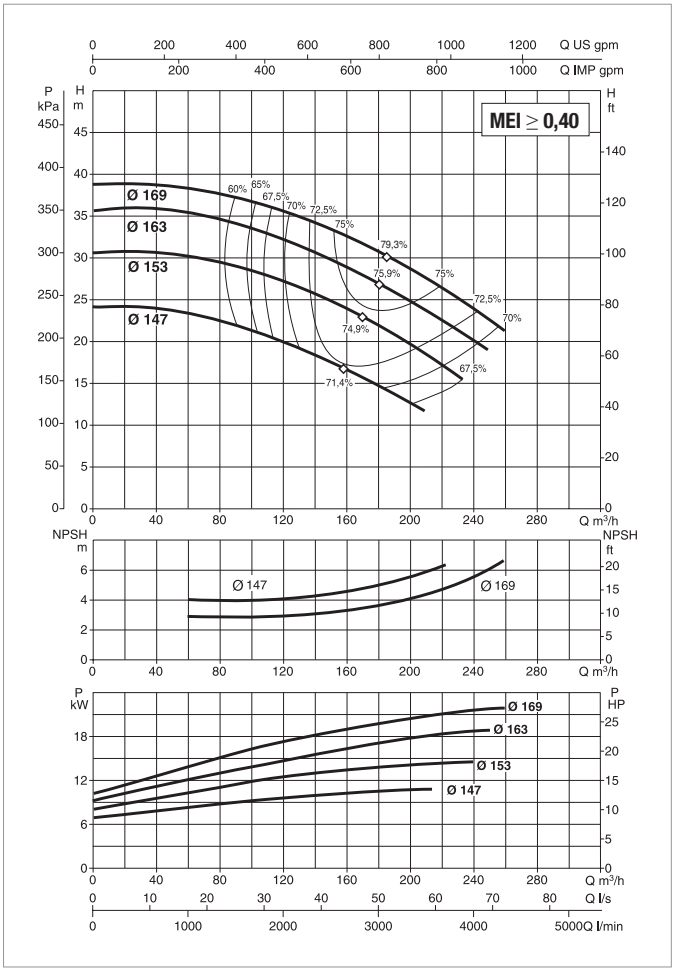

See hydraulic efficiency details on page 291.

The performance curves are based on kinematic viscosity values = 1 mm²/s and density equal to 1000 kg/m³. Curve tolerance according to ISO 9906.

MODEL	ELECTRICAL DATA						
	MOTOR SIZE	POWER INPUT 50 Hz	P2 NOMINAL		In A		MOTOR TYPE
			kW	HP	IE2	IE3	
NKP-G 80-160/147-127/11 /2	MEC 160 M	400 V Δ	11	15	20.2	19.4	IE2 / IE3
NKP-G 80-160/153/15 /2	MEC 160 M	400 V Δ	15	20	27	26.5	IE2 / IE3
NKP-G 80-160/163/18.5 /2	MEC 160 L	400 V Δ	18.5	25	33	32	IE2 / IE3
NKP-G 80-160/169/22 /2	MEC 180 M	400 V Δ	22	30	39.5	38	IE2 / IE3

MODEL	A	B	E	F		G	H1	H2	L	N1	N2	S1	W	X	H4	Ø (mm) Mech. seal	DNA	DNM	PACKING DIMENSIONS			VOLUME (m³)	WEIGHT kg	
				IE2	IE3														L/A	L/B	H		IE2	IE3
NKP-G 80-160/147-127/11 /2	125	67	210	505	505	350	160	225	368	314	254	M12	351	140	20	28	100	80	1030	530	640	0.349	131	179
NKP-G 80-160/153/15 /2	125	67	210	505	505	350	160	225	368	314	254	M12	351	140	20	28	100	80	1030	530	640	0.349	149	181
NKP-G 80-160/163/18.5 /2	125	67	254	560	549	350	160	225	368	314	254	M12	351	140	20	28	100	80	1030	530	640	0.349	173	192
NKP-G 80-160/169/22 /2	125	74	241	580	580	350	180	225	368	345	279	M12	364	140	–	28	100	80	1130	580	740	0.485	187	221

NKP-G 80-200- STANDARDISED MONOBLOC CENTRIFUGAL ELECTRIC PUMPS FOR AIR CONDITIONING, REFRIGERATION, IRRIGATION, DECANTING, PRESSURISATION SYSTEMS, AND INDUSTRIAL APPLICATIONS

Pumped liquid temperature range: from -10 °C to +140 °C - **Maximum ambient temperature:** +40°C

≅ 2900 1/min

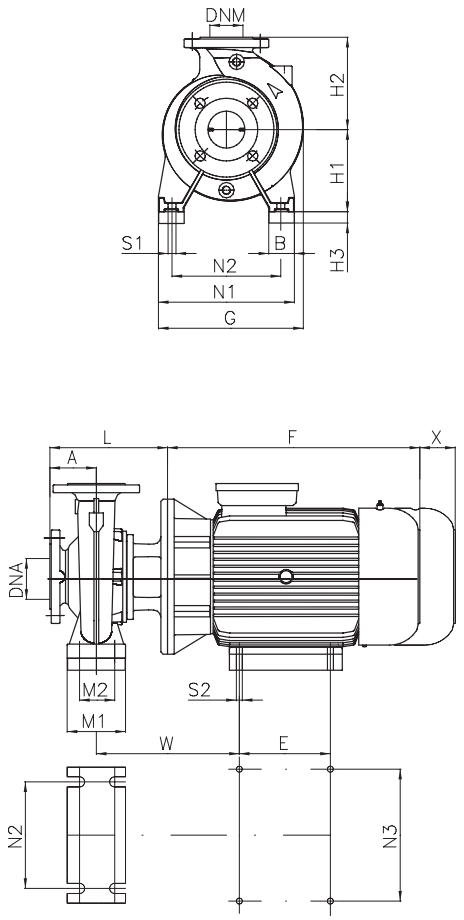

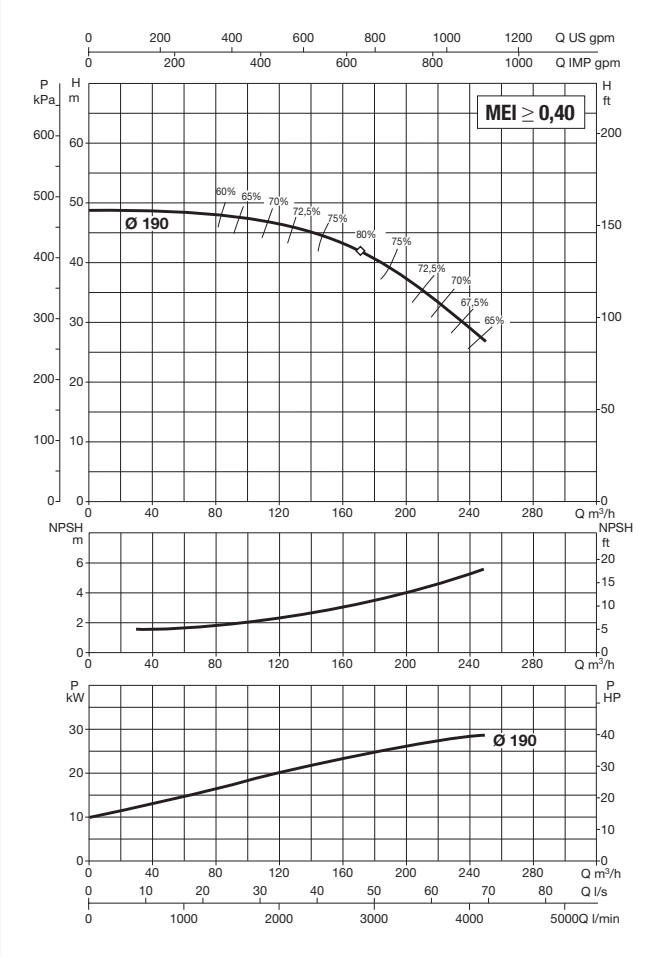

See hydraulic efficiency details on page 291.

The performance curves are based on kinematic viscosity values = 1 mm²/s and density equal to 1000 kg/m³. Curve tolerance according to ISO 9906.

MODEL	ELECTRICAL DATA						
	MOTOR SIZE	POWER INPUT 50 Hz	P2 NOMINAL		In A		MOTOR TYPE
			kW	HP	IE2	IE3	
NKP-G 80-200/190/30 /2	MEC 200 L	400 V Δ	30	40	52	52	IE2 / IE3

MODEL	A	B	E	F		G	H1	H2	L	M1	M2	N1	N2	N3	S1	S2	W	X	H3	Ø (mm) Mech. seal	DNA	DNM	PACKING DIMENSIONS			VOLUME (m³)	WEIGHT kg	
				IE2	IE3																		L/A	L/B	H		IE2	IE3
NKP-G 80-200/190/30 /2	125	65	305	660	670	400	180	250	398	125	95	345	280	318	M10	M16	406	140	20	28	100	80	1130	580	740	0.485	340	374