BATTERY COMBI TOOL

SPS 360 MK2 E-FORCE3

EFORCE3

Part no. ?

1096647

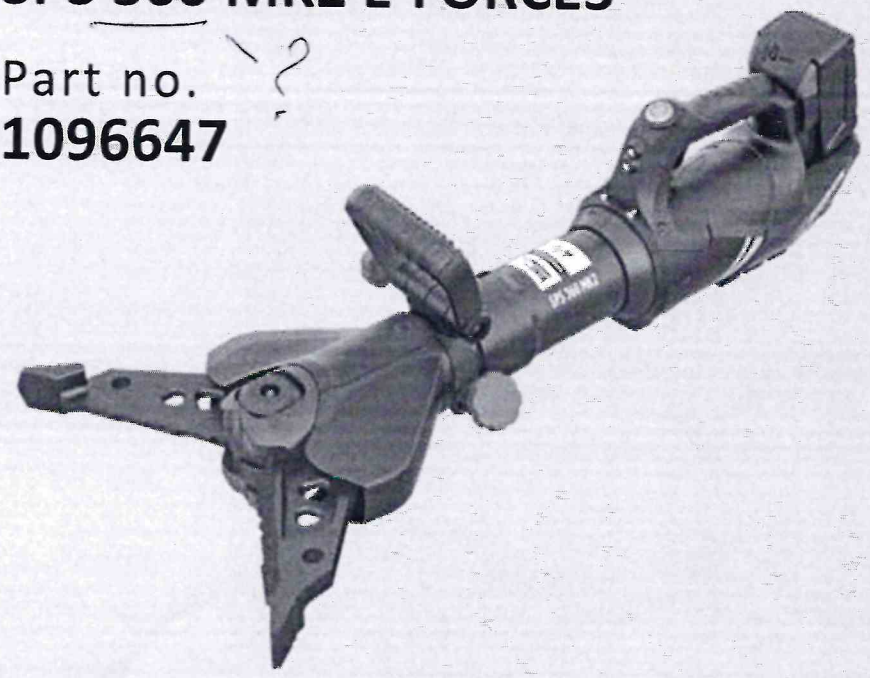

CHARGE

FORGED

HANDLE

SPEED CONTROL

ULTIMATE

X-CHANGE

Technical data:

Spreading width	360 mm
Spreading force (in the working area)	36 - 783 kN
Opening width	285 mm
Pulling width (with adapters)	440 mm
Max. pulling force	53 kN
Weight (ready for use)	18,1 kg
Dimensions (LxWxH)	927 x 236 x 241 mm
Nominal pressure	700 bar ?
EN classification (EN 13204)*	CK36/360I-18,1
EN cutting class (EN 13204)*	1I-2K-3J-4K-5J
NFPA cutting class (NFPA 1936	A7-B8-C7-D9-E8-F5

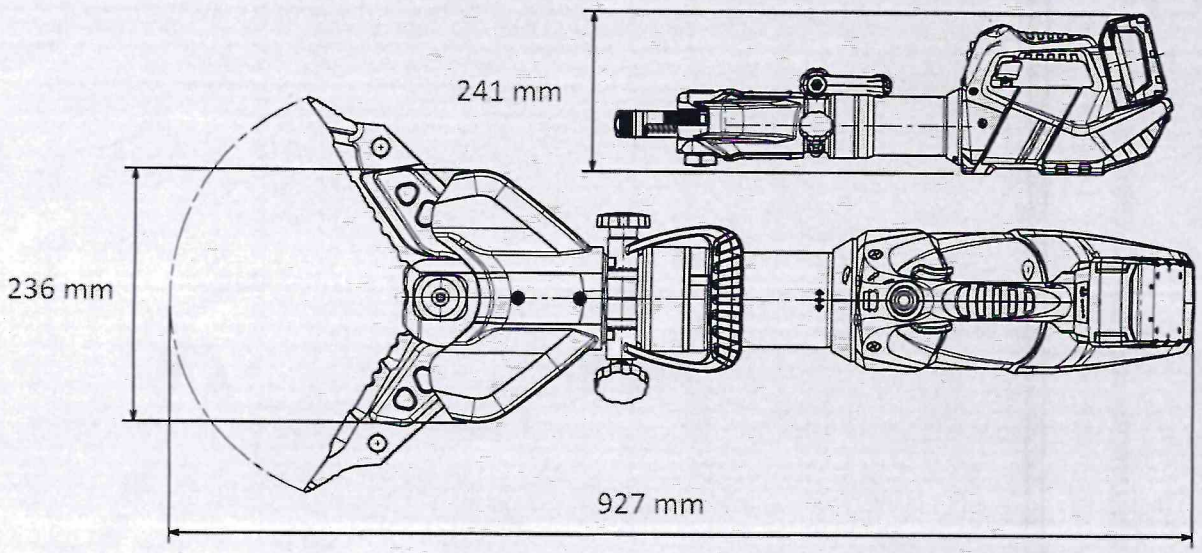

*According to EN 13204. Images are non-binding. We reserve the right to technical modifications.
60005269 (A, 200100, ALL, 29.07.2020)

WEBER-HYDRAULIK GMBH
Heilbronner Straße 30
74363 Güglingen/Deutschland
Fon +49 7135/71-10270
Fax +49 7135/71-10396
info@weber-rescue.com

Emil Weber Platz 1
4460 Losenstein/Österreich
Fon +43 7255/6237-120
Fax +43 7255/6237-12461
info@weber-rescue.com

WEBERRESCUE SYSTEMS
www.weber-rescue.com