MODEL RANGE

FMX13 6x4 Rigid - Rear Air Suspension - N3 or N3G FMX 64R 3A

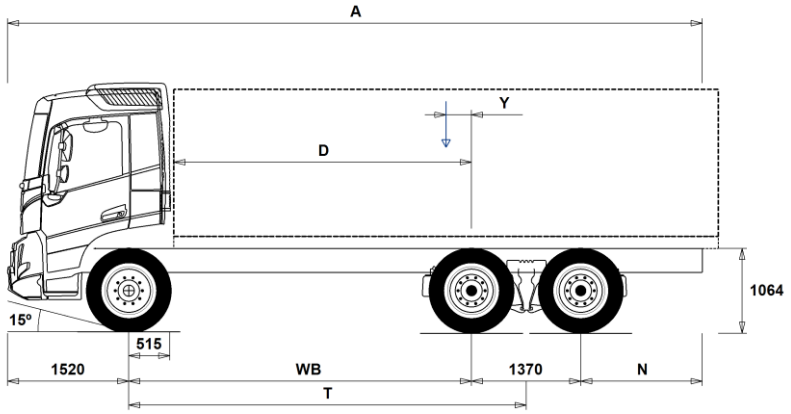

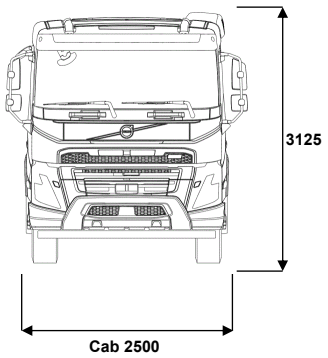

Chassis Dimensions [mm]

WB	Wheelbase	3400	3700	3900	4300	4600	4900	5200	5600
A	Overall Chassis Length	7465	8615	8915	9565	10715	10465	10965	11565
D	Center of rear axle to front of body	2835	3135	3335	3735	4035	4335	4635	5035
N	Rear Overhang (Min.)	825	825	825	825	825	825	1225	1225
N	Rear Overhang (Max.)	1175	2025	2125	2375	3225	2675	2875	3075
T	Theoretical Wheelbase	4085	4385	4585	4985	5285	5585	5885	6285
Y	Center of Gravity for Payload (Min.)	-198	-155	-132	-86	-43	-20	15	58
Y	Center of Gravity for Payload (Max.)	30	90	125	194	256	296	349	415

Chassis Weights [kg]

Front Axle	4855	4840	4845	4865	4850	4890	4895	4920
Rear Bogie	3205	3295	3305	3360	3465	3415	3445	3480
Kerb Weight	8060	8135	8150	8225	8315	8305	8340	8400
Payload (including body, driver, fuel, etc.)	17940	17865	17850	17775	17685	17695	17660	17600

Turning Diameter [mm]

Turning Circle Diameter Kerb to Kerb	14500	15500	16100	17300	18200	19100	20000	21300
Turning Circle Diameter Wall to Wall	16000	16900	17600	18800	19700	20600	21500	22800

Plated Weights [kg]	Plated	Design
Gross Vehicle Weight	26000	29000
Gross Combination Weight	26230	44000
Front Axle	8000	8000
Rear Bogie	19000	21000

Important Notes

Chassis Dimensions
Cab Height: +328 mm for CAB-HSLP, -262 mm for CAB-LDAY, -262 mm for CAB-LSLP, +16 mm for CAB-SLP.
Front Axle to Back of Cab: +431 mm for CAB-HSLP and CAB-SLP, -69 mm for CAB-LDAY, +425 mm for CAB-LSLP.
D-measure includes a front clearance of 50 mm and for rigid trucks also a subframe of 100 mm.
Height can vary ± 20 mm for leaf and ± 10 mm for air suspension.
All dimensions are for unladen chassis and any tag axles down. Chassis height used: CHH-HIGH.
Rear overhang used for vehicle weight calculation is the maximum rear overhang (N Max.) for selected wheelbase.
Height change when chassis height CHH-MED,FRAME300: 0 mm.

Weight and dimensions are based upon the following tyres:
Front Axle Tyres: 315/80R22.5
Drive Axle Tyres: 315/80R22.5

Chassis weight includes oil, water, AdBlue, 0 litres fuel and without driver. Kerb weight can vary ± 3%.

Turning diameters are theoretically calculated.

Legal weights can differ from country to country.

For more detailed weight information, including optional equipment weights, ask your Volvo sales contact to enter your specification into the Volvo Weight Information system (WIS).

Do NOT use this drawing for bodybuilding. Refer to Volvo Bodybuilder Instructions and chassis assembly drawing FMX64R3A.

MODEL RANGE

FMX13 6x4 Rigid - Rear Air Suspension - N3 or N3G FMX 64R 3A

TRUCK USE

□	RC-ROUGH	Road conditions - On / off-road
□	RC-SMOOT	Road Conditions - Smooth
□	GARB-PRE	Transport Adaption - Refuse preparation
□	SWAPBODY	Transport Adaption - Swap body vehicle preparation
□	TIPP-PRE	Transport Adaption - Tipper vehicle preparation
■	UNIFORM	Transport Adaption - Basic platform vehicle

CORE COMPONENTS

□	CHH-HIGH	Chassis height - High - for loading heights check the unique BEP chassis drawing attached to this quote
□	CHH-MED	Chassis height - Medium - for loading heights check the unique BEP chassis drawing attached to this quote
□	CHH-XHIG	Chassis height - X-High - for loading heights check the unique BEP chassis drawing attached to this quote
□	RADD-G2	Rear air suspension, 2 axles - 2 driven, high ground clearance
□	RADD-GR	RADD-GR - 6x4/8x4 Air - High
□	CDCOPREP	
□	FMX-CREW	Cab - Four-door crew for up to 9 people
■	FMX-DAY6	Cab - Day - with steel safety cage design Designed and built to Swedish impact and ECE R29 regulations
□	FMX-HSL6	Cab - Globetrotter - with steel safety cage design Designed and built to Swedish impact and ECE R29 regulations
□	FMX-LDA6	Cab - Low Day - with steel safety cage design Designed and built to Swedish impact and ECE R29 regulations
□	FMX-LSL6	Cab - Low Sleeper - all-steel safety cage design. Built to Swedish impact and ECE R29 regulations
□	FMX-SLP6	Cab - Sleeper, with steel safety cage design Designed and built to Swedish impact and ECE R29 regulations
■	EU6SCR	Emission level - Euro VI step E
■	D13S420A	Engine - New D13K420 12.8 litre developing 420hp at 14-1800rpm. Peak torque 2100Nm at 860 -1400rpm.
□	D13S460A	Engine - New D13K460 12.8 litre developing 460hp at 14-1800rpm. Peak torque 2300Nm at 900-1400rpm.
□	D13S500A	Engine - New D13K500 12.8 litre developing 500hp at 14-1800rpm. Peak torque 2500Nm at 1000-1400rpm.
□	D13S540A	Engine - New D13K540 12.8 litre developing 540hp at 14-1800rpm. Peak torque 2600Nm at 1000-1450rpm.
■	D13K420	D13K420 - 420hp engine
□	D13K460	D13K460 - 460hp engine
□	D13K500	D13K500 - 500hp engine
□	D13K540	D13K540 - 540hp engine
□	EBR-EPG	Engine brake type - Exhaust brake controlled by steering column switch
□	EBR-EPGC	Engine brake type - Exhaust pressure governor for I shift gearbox
□	EBR-VEB+	Engine brake type - Volvo engine brake + and exhaust pressure governor, enhanced performance from additional exhaust rocker control. Max Retardation D13-375kW / D17-525kW
■	AT2612	Gearbox - AT2612 12-speed "I-Shift" automated mechanical suitable for gross train weights up to 60 tonne only. Refer to sales engineering when used in conjunction with a PTO
□	AT2812	Gearbox - AT2812 12-speed I-Shift automated mechanical suitable for gross train weights up to 60 tonne. Refer to sales engineering when used in conjunction with a PTO
□	ATO2612	Gearbox - ATO2612F 12-speed I-Shift overdrive automated mechanical, suitable for gross train weights up to 100 tonne. Refer to sales engineering when used in conjunction with a PTO
□	ATO3112	Gearbox - ATO3112 12-speed I-Shift overdrive automated mechanical, suitable for gross train weights up to 60tonne. Refer to sales engineering when used in conjunction with a PTO
□	PT2606	Gearbox - Powertronic automatic 6-speed, max. engine torque 2600 Nm, max. permitted GCW 130000 kg
□	ASO-C	Crawler gear - Ratio direct top gearbox 19:1 Ratio Overdrive gearbox 17:1
□	ASO-ULC	Ultra low crawler and crawler gear - Ratios direct top gearbox 32:1 and 19:1 Ratios Overdrive box 32:1 and 17:1
□	TAAXLIFT	Rear axle lift for double drive bogie CONTACT VOLVO SALES ENGINEERING to check lift capability
□	RTH2610B	Drive axles - RTH2610B 26-tonne hub reduction tandem with differential and cross locks* - design GCW 100tonne, 4 planetary gears * Cross locks replaced by a dog clutch if tandem axle lift is specified.
□	RTH2610F	Drive axles - RTH2610F 26-tonne hub reduction tandem with differential and cross locks* - design GCW 100tonne * Cross locks replaced by a dog clutch if tandem axle lift is specified.
□	RTS2310A	Drive axles - RTS2310A 23-tonne single reduction tandem with differential and cross locks*- design GCW 100tonne * Cross locks replaced by a dog clutch if tandem axle lift is specified
■	RTS2370A	Drive axles - RTS2370A 23-tonne single reduction tandem with differential and cross locks*- design GCW 70tonne * Cross locks replaced by a dog clutch if tandem axle lift is specified
□	PTO-HT16	High torque power take-off up to 1600Nm
□	PTO-HT20	High torque power take-off up to 2000Nm

PACKAGES

□	NCAP2024	Euro NCAP safety package - Advanced driver assist safety package with 5 star rating equivalence
□	FP-D13	Fuel Package
□	DRIV-EXT	Cab package - Drive Extended
□	DRIV-SEL	Cab Package - Drive Select
□	1LIVINFM	Sleep & Resting Package - Living one-bed
□	2LIVINFM	Sleep & Resting Package - Living two-bed
■	INFOHIGH	Media Information Platform - Medium level
□	SAFE-EXT	Safety Package - Extended
□	SAFE-SEL	Safety Package - Select
□	CHASPAC	Chassis Package Rigid

CHASSIS

□	FST-AIR	Front suspension type - Air
■	FST-PAR	Front suspension type - 2 leaf parabolic springs
□	FST-PAR3	Front suspension type - 3 leaf parabolic springs
□	FST-PL1	Front suspension type - Lightweight 2 leaf parabolic springs - top leaf steel - lower composite
□	FSLS-BAS	Front suspension levelling - basic stroke
□	FSLS-HI	Front suspension levelling - high stroke for demount operations - check with bodybuilder
□	FAL10.0	Front axle design capacity - 10 tonne - check tyre capacity
■	FAL8.0	Front axle design capacity - 8.0 tonne - check tyre capacity
□	FAL8.5	Front axle design capacity - 8.5 tonnes
□	FAL9.0	Front axle design capacity - 9.0 tonne - check tyre capacity
□	FSM-LUB	Front suspension maintenance - Lubricated rear shackles on pins and bushings
■	FSTAB	Front anti-roll bar - Normal stiffness
□	FSTAB2	Front anti-roll bar - Medium stiffness
□	FSTAB3	Front anti-roll bar - High stiffness
■	RAL21	Rear bogie design capacity - 21 tonne

■ Standard Equipment □ Optional Equipment

For more detailed information about cab and powertrain equipment, please refer to separate specification sheets.

For all possible options and combinations of options please consult your Volvo sales contact who can create a specification to match your requirements using the Volvo Sales Support system (VSS).

The factory reserves the right to modify design and change equipment without previous notification.
The specification can vary from country to country.

MODEL RANGE

FMX13 6x4 Rigid - Rear Air Suspension - N3 or N3G FMX 64R 3A

□	RAL23	Rear bogie design capacity - 23 tonne
□	RAL26	Rear bogie design capacity - 26 tonne
■	RSTAB1	Rear anti-roll bar - Normal stiffness
□	RSTAB3	Rear anti-roll bar - Stiff
□	RALIM105	Rear-axle load limiter - 10.5 tonne - speed controlled
■	RALIM115	Rear-axle load limiter -11.5 tonne - speed controlled
□	RALIM13	Rear-axle load limiter - 13 tonne
□	RALIM95	Rear-axle load limiter - 9.5 tonne
■	ASF-DL1	Air suspension with 1 driving level
□	ASF-DL3	Air suspension with 3 driving levels
□	ACTST-TO	Active Steering- Volvo Dynamic Steering - VDS - with extra electronic pump and torque overlay
□	ASFE-BAS	Active steering feature - Basic - Volvo Dynamic Steering - VDS - only
□	ASFE-OG	Active steering feature - Volvo Dynamic Steering - VDS - with stability assist - oversteer
□	ASFE-PO	Active steering feature - Volvo Dynamic Steering - VDS - with personal settings and stability assist
□	ASFE-PS	Active steering feature - Volvo Dynamic Steering - VDS - with personal settings
■	PSS-SING	Power steering system - Single
■	PSP-FIX	Power steering pump - Fixed displacement
□	PSP-VAR	Power steering pump - Variable displacement
□	PSP-VAR2	Power steering pump - Variable displacement with electronic control
■	EBS-MED	Brake package - EBS medium including "hill" hold function
□	AUXPARK	Auxiliary parking brake - Additional spring brakes
■	RST-AIR	Rear suspension type - Air
□	RST-AIR6	Rear suspension type - Air with reinforced air bellows for heavier loads at higher temperatures
■	SUSPL-EC	Remote electronic control on wander-lead for air suspension levelling
□	FRAME266	Chassis frame section external height - 266 mm
■	FRAME300	Chassis frame section external height - 300 mm
□	FST7070	Chassis frame thickness - 7 mm web and flange
■	FST8080	Chassis frame thickness - 8 mm web and flange
□	FIL-EEEB	Chassis frame inner liner - From the end of the engine to the end of the bogie
□	FIL-EEEF	Chassis frame inner liner - From the end of the engine to end of the frame
□	FIL-FBEB	Chassis frame inner liner - Over the rear bogie
□	FIL-FBEF	Chassis frame inner liner - From the front of bogie to the end of the frame
□	FIL-TXEB	Chassis frame inner liner - From gearbox member to the end of the bogie
□	FIL-TXEF	Chassis frame inner liner - From gearbox member to the end of the frame
■	BBOX-L	Battery box position - Left hand side
□	BATS-D	Dual energy battery system - 2 living batteries and 2 starter batteries.
■	BATS-S	Single energy battery system (2 batteries)
□	2BAT210B	Battery Capacity - 2 x 210 Ah - Gel type
■	2BAT210C	Battery Capacity - 2 x 210 Ah - AGM Absorbent Glass-fibre Material type
■	BATTAMP	Battery management - Voltage and current gauge
□	BATTIND	Battery management - Voltage, current and charge indicators
□	ADR2	ADR Adaptation - For transportation of dangerous goods on the road - Note does NOT include safe loading pass package if required this is quoted separately
□	MSWI-A	Battery master switch - ADR switch circuit shut down
□	MSWI-C	Battery master switch - Chassis mounted toggle by the battery box
■	MSWI-R	Battery master switch - Key fob operated remote controlled
■	R365A71	Right fuel tank - 365litre aluminium diameter 710mm Min volume 255l Max volume 810l
■	UL-FUEL	Left fuel tank - Without Min volume 160l Max volume 730l
□	ADTP-L	Adblue tank position - Chassis mounted on the left-hand side
■	ADTP-R	Adblue tank position - Chassis mounted on the right-hand side
□	ADB048	Plastic AdBlue tank - 48 litre
■	ADB064	Plastic AdBlue tank - 64 litre
□	ADB068	Plastic AdBlue tank - 68 litre
□	ADB083	Plastic AdBlue tank - 83 litre
□	ADB090	Plastic AdBlue tank - 90 litre
□	ADB112	Plastic AdBlue tank - 112 litre
□	ADTC-BF	AdBlue tank cover with satin alloy look decorative cover
■	FCAP-L	Diesel and AdBlue filler cap - Locking
■	FUFF-AS	Fuel filler - Anti-spill device
□	FUFF-ATS	Fuel filler - Anti-spill & anti-syphon device
□	ESH-LEFT	Exhaust - Horizontal silencer - left outlet
■	ESH-REAR	Exhaust - Horizontal silencer - rear outlet
□	ESH-RIGH	Exhaust - Horizontal silencer - right outlet
□	ESH-VERT	Exhaust - Horizontal silencer - vertical outlet
□	EXST-SSP	Stainless steel exhaust stack - NOT polished
□	EXST-ST	Steel exhaust stack
□	HS-NAR	Narrow heat shield
□	WHC-FIX2	Wheel chocks - Two fixed design
□	WHC-FOL2	Two foldable wheel chocks
□	WHCP-F	Wheel chock carrier position - In the front part of the vehicle
□	WHCP-M	Wheel chock carrier position - Middle part of the vehicle
□	WHCP-R	Wheel chock carrier position - In the rear part of the vehicle
□	WHCP-T	Wheel chock carrier position - Outer luggage locker
□	TB-L80	Toolbox 800 mm, left side
□	TB-R80	Toolbox 800 mm, right side
□	SUP-BAS	Side guards - Check with bodybuilder chassis space requirements
□	SUP-LOW	EC approved low chassis side guards
□	CHAIN-S	Snow chains
□	HOOK-SC	Snow chain hooks
■	TOWF-HD1	Front towing device - One heavy-duty front towing device
□	TOWMBRH	Towing member, high mounted in centre of frame, D = 190
□	TOWMBRL1	Towing member, low mounted under the frame
□	TOWMBRL2	Towing member, low and forward mounted under the frame
□	TOWMBRL3	Towing member, low and far forward mounted under the frame
□	TOWMBRM	Towing member, medium mounted in line with frame lower flange
□	RFEC-L	Rear frame profile - Lower flange cut for centre axle drawbar
■	RFEC-S	Rear frame profile - Straight cut
□	RFEC-U	Rear frame profile - Slight uppercut for tippers
□	C-RI4040	Towing coupling, Ringfeder 4040A
□	C-RI5050	Towing coupling, Ringfeder 5050A
□	C-RO400G	Towing coupling, Rockinger 400 G-150 for 40mm eyes
□	C-RO50	Rockinger RO 50 50mm for centre axle trailer
□	C-VBG795	VBG 795V-3 coupling (centre axle trailer)
□	TOWR-ONE	Towing hitch attached to rear crossmember
■	TREL-PK	Trailer electrical preparation kit - chassis/cab wiring
□	TREL14	Single 14 pole electrical trailer connector
□	TREL15	Trailer electrical connection - Single 15 pin - ADR certified
□	TREL7	7 pole - 24N trailer electrical suzie
□	TREL7-7	Trailer electrical connection - 2 x 7 pin - 24N and 24S
□	TBC-DUO	Trailer brake connections - Duomatic type
□	TBC-EC	Trailer brake connections - EC palm coupling connectors
□	TRBR-STA	Stationary trailer brake control

■ Standard Equipment □ Optional Equipment

For more detailed information about cab and powertrain equipment, please refer to separate specification sheets.

For all possible options and combinations of options please consult your Volvo sales contact who can create a specification to match your requirements using the Volvo Sales Support system (VSS).

The factory reserves the right to modify design and change equipment without previous notification.
The specification can vary from country to country.

MODEL RANGE

FMX13 6x4 Rigid - Rear Air Suspension - N3 or N3G FMX 64R 3A

□	TRB-STRE	Stretch Brake - Automatic low speed trailer brake activation to avoid jack-knifing and improve steerability
□	RUP-FOLD	Rear underrun protection - Aluminium folding EC approved
□	RFEND-B	Rear mud wings - Three piece EC approved and spray flaps
□	RFEND-T	Rear mud wings - Temporary on drive axle for transport delivery only
□	RFH-BAS	Basic rear wing height
□	RFH-HIG	High rear wing height - higher wing tops
□	RFH-LOW	Lower rear wing height - shallower wing tops
□	AUXATNK	Auxiliary airtank
□	ATANK-AL	Air tanks - Aluminium
■	ATANK-ST	Air tanks - Steel
□	RESTS-W	White conspiciuty markings on chassis - sideguards, toolbox and rear overhang
□	REST-RUP	
■	TL-LED	Rear lights - LED
■	BLIGHT-E	Emergency brake light

WHEELS & TYRES

□	RT-AL	Wheels - Howmet Alcoa brushed aluminium rims - standard holes for long stud fixing
□	RT-AL1	Wheels - Howmet Alcoa brushed aluminium rims LVL one - standard holes for long stud fixing
□	RT-AL1DU	Wheels - Howmet Alcoa brushed aluminium rims LVL one - countersunk holes for short stud fixing
□	RT-ALDP	Wheels - Howmet Alcoa Dura-Bright aluminium rims - standard holes for long stud fixing
□	RT-ALDPD	Wheels - Howmet Alcoa Dura-Bright EVO aluminium rims - countersunk holes for short stud fixing
□	RT-ALDU	Wheels - Howmet Alcoa brushed aluminium rims - countersunk holes for short stud fixing
■	RT-STEEL	Wheels - Steel rims
□	WCAP	Aerodynamic hub caps
□	SPWT-D	Spare wheel & tyre with rear tyre pattern
□	SPWT-F	Spare wheel & tyre with front tyre pattern
□	SWCP-LF	Spare wheel carrier on left side of chassis ahead of rear axle
□	SWCP-R	Rear mounted spare wheel carrier
□	SWCP-T	Spare wheel supplied temporarily strapped to chassis
□	SWCP-TP	Temporary spare wheel carrier on top of chassis frame
□	JACK-12T	12 tonne bottle jack
□	JACK-15T	15 tonne bottle jack
□	JACK-20T	20 tonne bottle jack
■	TOOL-BAS	Toolkit - Basic
□	TOOLKIT	Toolkit - Complete
□	INFLAHOS	Tyre inflation hose
□	GAUGE-TP	Tyre pressure gauge

DRIVELINE EQUIPMENT

□	TRAP-HD	Reinforced gearbox application
■	DRM-BE	Drive mode - Balanced & Economy
□	DRM-E	Drive mode - Economy
□	PVT-MAP	I-See Predictive Cruise Control - using map-based topography information
■	PVT-MTM	I-See Predictive Cruise Control - using map-based topography information with lower operating settings
■	CRUIS-E	Cruise control - with I-roll and I-cruise, controls in steering wheel
□	CRUIS-E5	Eco torque software - Improved economy mode. Fuel economy optimized cruise control for I-Save
□	AMSO-AUT	Enhanced I-shift software with manual shift available in auto mode and kickdown facility on accelerator pedal
□	AVO-ENH	I-Shift application software - Construction and off road applications
□	APF-ENH	I-shift enhanced PTO functions
□	RET-TH	Gearbox mounted retarder
□	RET-TPT	Hydraulic Retarder for Powertronic gearbox
□	TC-HWO	Transmission oil cooler - water to oil
□	TC-MAOH2	Extra high performance transmission oil cooler - air to oil with front mounted radiator
□	TC-MWO	Basic transmission oil cooler - water to oil
□	2COM1100	Air compressor - Two-cylinder 1100 litres per minute
■	2COMP870	Air compressor - Two-cylinder 870 litres per minute
□	2COMP900	Air compressor - Two-cylinder 900 litres per minute
□	CLU-AIRC	Clutchable air compressor
■	AIRIN-HI	Air intake - Roof-mounted behind cab on the left-hand side
□	AIRIN-LO	Low level air intake behind cab on left hand side
□	ACL1ST-S	Air filter - two-stage element
■	24A110BL	Alternator capacity - 110 amp
□	24A150BL	Alternator capacity - 150 amp
□	24A180BL	Alternator capacity - 180 amp
□	24AL110B	Alternator capacity - 110 amp
□	24AL150B	Alternator capacity - 150 amp
□	CCV-C	Closed crankcase engine ventilation
■	CCV-OX	Closed crankcase ventilation for cold markets
■	PRIM-EL	Electrical priming pump
□	PRIM-MAN	Manual priming pump
□	FUEQ-EH	Fuel line electric heater
□	AF-R	Hot fuel recirculation heated fuel filter
■	FUEFE2LW	Large engine mounted dual fuel filter with water separator
□	FUEFE2SW	Small engine mounted dual fuel filter with water separator
□	EST-AID	Engine starting aid -Preheating element in the air inlet manifold
□	220EBH15	220V/1.5Kw electric engine block heater
□	PTER-100	Engine power-take-off - Rear-mounted with DIN100/ISO7646 flange
□	PTER-DIN	Engine power-take-off - Rear-mounted with DIN5462 (female) splined shaft for a close-coupled pump Models with 3 steering axles will use this to drive the steering pump (AUXPSP)
□	PTER1400	Engine power-take-off - Rear-mounted with SAE 1410 flange
□	HPE-F101	Parker F1-101,engine mounted, fixed displacement, single flow, engine mounted hydraulic pump
□	HPE-F41	Parker F1-41, engine mounted, fixed displacement, single flow, engine mounted hydraulic pump
□	HPE-F51	Parker F1-51, engine mounted, fixed displacement, single flow, engine mounted hydraulic pump
□	HPE-F61	Parker F1-61, engine mounted, fixed displacement, single flow, engine mounted hydraulic pump
□	HPE-F81	Parker F1-81, engine mounted, fixed displacement, single flow, engine mounted hydraulic pump
□	HPE-T53	Parker F2-53/53, engine mounted, Fixed displacement, Twin flow engine mounted hydraulic pump
□	HPE-T70	Parker F2-70/35, engine mounted, Fixed displacement, Twin flow engine mounted hydraulic pump
□	HPE-V45	Parker VP1-45, variable displacement, single flow, engine mounted hydraulic pump
□	HPE-V75	Parker VP1-75, variable displacement, single flow, engine mounted hydraulic pump
□	PTPT-D	Powertronic PTO, 1 front/upper DIN connection for plug-in pump (max. 850 Nm)
□	PTPT-F	Powertronic PTO, 1 front/upper rear facing SAE flange conn. for prop shaft (max.850 Nm)
□	PTR-D	Gearbox PTO for plug-in pump, 0.71xeng speed
□	PTR-DH	Gearbox driven high speed PTO for one plug-in hydraulic pump
□	PTR-DM	Gearbox driven medium speed PTO for one plug-in hydraulic pump
□	PTR-F	Gearbox driven PTO with rear flange connection
□	PTR-FH	Gearbox driven high speed PTO with SAE drive flange
□	PTR-FL	Gearbox driven low speed PTO with SAE drive flange

■ Standard Equipment □ Optional Equipment

For more detailed information about cab and powertrain equipment, please refer to separate specification sheets.

For all possible options and combinations of options please consult your Volvo sales contact who can create a specification to match your requirements using the Volvo Sales Support system (VSS).

The factory reserves the right to modify design and change equipment without previous notification.
The specification can vary from country to country.

MODEL RANGE

FMX13 6x4 Rigid - Rear Air Suspension - N3 or N3G FMX 64R 3A

□	PTRD-D	Gearbox driven HIGH SPEED PTO for two plug-in hydraulic pumps
□	PTRD-D1	PTRD-D1 Gearbox driven HIGH SPEED PTO (1 SAE flange & 1 plug-in hydraulic pump)
□	PTRD-D2	Gearbox driven HIGH SPEED PTO (2 SAE flanges & 1 plug-in hyd pump)
□	PTRD-F	PTO with 1 DIN + 1 flange connection rear, manual gearbox
□	HPG-F101	Gearbox mounted hydraulic pump - Parker F1-101 hydraulic pump gearbox mounted
□	HPG-F41	Gearbox mounted hydraulic pump - Parker F1-41 gearbox mounted, fixed displacement, single flow
□	HPG-F51	Gearbox mounted hydraulic pump - Parker F1-51 gearbox mounted, fixed displacement, single flow
□	HPG-F61	Gearbox mounted hydraulic pump - Parker F1-61 gearbox mounted, fixed displacement, single flow
□	HPG-F81	Gearbox mounted hydraulic pump - Parker F1-81 gearbox mounted, fixed displacement, single flow
■	STWPOS-R	Steering wheel position - RIGHT-HAND DRIVE
□	STWM-LE	Steering wheel - Leather
□	STGW-AD2	Steering wheel adjustment - Neck tilt, column height and angle
■	STGW-ADJ	Steering wheel adjustment - Column height and angle
■	AIRBAG	Driver air bag
■	DRC-AMII	DPF Regeneration control switch - for manual and switching off regeneration
■	1DAYDIG4	Smart tachograph - Continental VDO 4.1 version 2 - legal demand from 21/08/2023
□	ARSL	Additional road speed limit - switch in dashboard
□	SPEED-DU	Dual speed limiter
■	ESP-BAS1	Electronic Stability Control ESC
□	ESPC-RO	Additional ESC functions - Reduced / Off
□	HWSS-ACB	Forward collision warning with adaptive cruise control and AEBS advanced emergency brake system
■	HWSS-FCB	Forward collision warning with AEBS advanced emergency brake system
■	LSS-DW	Lane departure warning system
□	LSS-DW3	Lane departure warning system with pilot assist
■	LCS4	Side Collision Avoidance Support - Passenger and driver side
□	LCS5	Side Collision Avoidance Support - Active support with emergency brake on passenger side. Collision warning on passenger and driver side
■	DAS-W	Driver Alert Support system
□	RSENS-W	Rain sensing windscreen wipers
■	CU-ECC	Cab climate Unit - Electrically controlled air conditioning with sun sensor
□	CU-ECC2	Cab climate Unit - Electrically controlled air conditioning with a carbon filter, sun, mist, and air quality sensor
■	IGT-BUT	Vehicle starting - Push-button
■	IMMOBIL	Immobiliser
□	ALARM-E	Vehicle alarm - Cab plus external sensor for body/trailer
□	PHONE-PK	Telephone preparation kit (antenna, antenna attachm. cable incl.)
□	ISUNS-BS	Side sun visor - Driver & passenger side
■	ISUNS-DS	Side sun visor - Driver-side
□	ISUNF-B	Interior front sun visor without mirror
□	ISUNF-MD	Interior front sun visor with mirror on driver side
□	ISUNF-RE	Electrically operated textile interior sun blind
■	ISUNF-RM	Manually operated textile interior sun blind
□	ADFS	Two extra DIN slots in front shelf - can be fitted with card or drawer available as an accessory
■	BUPALARM	Reverse alarm
□	RTOLL-PK	Road toll PREPARATION kit for trucks operating with "Toll Collect" in Germany
□	LOADIND	Load indicator with central dashboard display
□	REMC-MF	Multi-functio wireless remote control
□	FIREXT3S	Fire extinguisher - 3kg mounted on the seat base
□	WARNVEST	High visibility warning vest - No sleeves
□	AIDKIT	First aid kit - Legal demand for EU markets including delivery to EU bodybuilder
□	AIDKIT1B	First aid kit - Legal demand for trucks transiting Germany
□	WARNLAMP	Portable warning lamp
□	LAMP-IN	Inspection lamp
□	BULBKIT	Bulb and fuse kit
□	WRITEPAD	Writing pad
■	DST-CF4	Driver seat - Suspended, adjustable shock absorber, travel, backrest & lumbar controls with integrated seatbelt
□	DST-CF5	Driver seat - Suspended with adjustable shock absorber, travel, backrest, lumbar & heat controls with integrated seatbelt
□	DST-CF6	Driver seat - Suspended with adjustable shock absorber, travel, backrest, lumbar, heat and ventilation controls with integrated seatbelt
□	DST-LUX1	Driver seat - Deluxe 1: electrical adjustment with memory function, lumbar support, heating & ventilation with integrated seatbelt
□	SBD-RED	Seat belt colour - Red
□	SBPRE-DS	Driver seat belt pretensioner
■	PST-BAS1	Passenger seat - Fixed non suspended fold up with seatbelt mounted on cab "B" post
□	PST-CF4	Passenger seat - Suspended, adjustable shock absorber, travel, backrest & lumbar controls with integrated seatbelt
□	PST-CF5	Passenger seat - Suspended with adjustable shock absorber, travel, backrest, lumbar & heat controls with integrated seatbelt
□	PST-STD2	Passenger seat - Fixed with backrest adjustment, non suspended with seatbelt mounted on cab "B" post
□	PST-STD4	Passenger seat - Standard suspended with seatbelt mounted on cab "B" post
□	SBPRE-PS	Passenger seat belt pretensioner
□	ARMRE-BB	Armrests - Two on both driver & passenger seats
□	ARMRE-DB	Armrests - Two on the driver seat
□	ARMRE-PB	Armrests - Two on the passenger seat
□	ARU-BAS	Armrest upholstery - Vinyl
□	ARU-LEA	Armrest upholstery - Leather
■	FMAT-RUB	Footwell floor mats - Rubber
□	FMAT-TX2	Footwell floor mats - Two sets, Rubber and textile with an embossed pile supplied in the cab
□	LBK70	Lower bunk - Fixed 700 x 2000 mm
□	MATL-FI	Lower mattress - Firm pocket sprung
□	MATL-SF	Lower mattress - Flexi-zone semi-firm, pocket springs up to 100kg - 16 stone
□	OLMAT-BA	Mattress overlay protector - 35mm thick
□	OLMAT-PR	Mattress overlay protector - Premium 50mm thick
□	TBK60F	Top bunk - Fixed foldable 600 x 1900mm
□	TBK70F	Top bunk - Fixed foldable 700 x 1900mm
□	PH-CAB2	Cab parking heater -1.8kW Air to air
□	PH-ENGCA	Cab parking heater - Engine and cab
□	PH-SS	Cab parking heater - Short stop
□	SLCP-BAS	Sleeper control panel - Basic with switches for interior light, night heater, roof hatch and door lock
□	ETSB-F	Storage on engine tunnel - Central document box with two rear cup holders
□	ETSB-FR	Storage on engine tunnel - Central document box with two rear cup holders & open storage pocket on cab rear wall

■ Standard Equipment □ Optional Equipment

For more detailed information about cab and powertrain equipment, please refer to separate specification sheets.

For all possible options and combinations of options please consult your Volvo sales contact who can create a specification to match your requirements using the Volvo Sales Support system (VSS).

The factory reserves the right to modify design and change equipment without previous notification.
The specification can vary from country to country.

MODEL RANGE

FMX13 6x4 Rigid - Rear Air Suspension - N3 or N3G FMX 64R 3A

□	ETSB-R	Storage on engine tunnel - Open storage pocket on cab rear wall
□	RUS-BAS	Rear cab upper storage - 300 mm high
□	RUS-HIG	Rear cab upper storage - 440 mm high - volume 245 litres
□	REF-ICPK	Fridge - Engine tunnel mounted preparation kit
□	REFR-RUS	Fridge - 28 litre rear upper wall mounted with dividers
□	MICRO-PK	Microwave equipment - Wiring preparation kit for oven
□	BOTH-D	Bottle holder - One under dashboard centre section
□	COFMA-PK	Coffee maker - Preparation kit.
■	INLI-BAS	Interior light - White LEDs
□	INLI-NL	Interior light - White and red nightlight LEDs without dimmer
□	INLI-NLD	Interior light - White and red nightlight LEDs with dimmer
□	ARL-FLEX	Flexible reading lamps - Two "snake" type
■	RH-EE	Fixed tinted glass sky window with emergency exit
□	RH-ER	Steel roof hatch - Electrically operated, rear opening with emergency exit
□	RH-ETR	Tinted glass roof hatch - Electrically operated, rear opening with emergency exit
□	RH-MTR	Tinted glass roof hatch - Manually operated, rear opening with emergency exit
■	GLAS-TIN	Cab windows - Tinted
□	SWIND-BS	Cab side window - On both sides behind 'B' post
□	SWIND-PS	Cab side window - Left side behind 'B' post
□	AWIND-RF	Rear window
□	VANMIR	Vanity mirror - In front shelf
□	AS-FUS	Extra shelf in front compartments
□	INFOT-PK	TV mounting preparation kit - Above the driver's door, includes bracket, electrical and speaker connections

CAB EXTERIOR

■	EXTL-BAS	Basic exterior finish - Satin Volvo badges, grey grille, instep, bumper, bumper spoiler, grille, door handles mirror housing and sunvisor if specified.
■	DGLAS-H	Door glass - Hardened
□	DGLAS-L	Door glass - Laminated
■	BUMP-HD	Front bumper - Heavy duty
□	AUXFS	Lower swinging cab step
□	GUARD-EH	Sump and radiator guard - to protect engine and hoses
■	BUGNET	Radiator insect screen
□	CTILTP-E	Electrically operated hydraulic cab tilt
■	CTILTP-M	Manually operated hydraulic cab tilt
□	FCABS-A	Front cab suspension - Air
■	FCABS-M	Front cab suspension - Mechanical spring
□	RCABS-A	Rear cab suspension - Air
■	RCABS-M	Rear cab suspension - Mechanical spring
□	MIRCFCPX	Mirrors - Electrically heated and operated FMX main and wide-angle with manually adjusted passenger kerb and front mirror and position camera in nearside mirror arm. To increase direct vision to the side the main mirrors have no cowlings
□	MIRCMCP	Camera monitoring and mirrors - Electrically heated and operated main and wide-angle rear view cameras with manually adjusted passenger kerb and front mirror and passenger corner pedestrian camera.
□	MIRCMS	Camera monitoring and mirrors - Electrically heated and operated main and wide-angle rear view cameras with manually adjusted passenger kerb and front mirror
■	MIRCOMFX	Mirrors - Electrically heated and operated FMX main and wide angle and manually adjusted passenger kerb and front mirror. To increase direct vision to the side the main mirrors have no cowlings
■	AMIR-F20	Auxiliary front view mirror with a 200mm radius
□	SUNV-H	External smoke grey sunvisor
□	AD-ROOF	Cab roof deflector - Adjustable
□	AD-SIDES	Cab side deflector - Short extension panels
■	HL-LED	Headlights - LED
□	HL-LED3	Headlights - LED Adaptive high beam
□	HBDA-A	Headlight main beam switching - Automatic
■	HL-CLEAN	Headlight cleaner - Washer jets
□	HLP-ST	Headlight protection
■	UDRIVL	Auxiliary driving lights - Without
□	ASL-RF2	Integrated roof spotlights - Two LED aerodynamic spot lights in Globetrotter sign box
□	BEACOA2F	Roof beacons - Two front roof mounted amber LED
□	BEACOA2R	Roof beacons - Two rear roof mounted amber LED
□	BEACON-P	Roof beacons - switch and wiring preparation only
□	BEACONA4	Roof beacons - Four amber LED - two front/ two rear
□	CABPT-R1	Single outlet for roof mounted accessories
■	CABPT-R2	Twin outlets for roof mounted accessories.
□	SPOTP-F	Spotlamp preparation in front, max 280W
□	SPOTP-R	Spotlamp preparation on roof, max 280W
□	SPOTP-RF	Spotlamp preparation on cab roof and in cab front, max 2x280W
□	ROS-IL2	Preparation kit for illuminated roof sign with switch loose in cab, fit after registration
□	CSGN-FMX	Cab sign logo - "Volvo FMX"
■	HORN-F1S	Horn - Air single tone - chassis mounted
□	HORN-R2S	Horn - Air - Two roof-mounted
□	ANT-CBR	Roof mounted antenna for CB radio, single aerial. Only Globetrotter cabs brings in extra DIN slots.
□	ACCBR-AP	Front, middle & rear roof mounted accessory brackets
□	ACCBR-F	Front roof mounted accessory bracket
□	ACCBR-FM	Front & middle roof mounted accessory brackets
□	ACCBR-FR	Front & rear roof mounted accessory brackets
□	ACCBR-M	Middle roof mounted accessory bracket
□	ACCBR-R	Rear roof mounted accessory bracket
□	ACCBR-RM	Rear & middle roof mounted accessory brackets
□	REFS-CW	White cab conspicuity markings mounted on cab side
□	REFS-TW	White cab conspicuity markings by packed in cab
□	REFS-TY	Yellow cab conspicuity markings by packed in cab

SUPERSTRUCTURE PREPARATIONS

□	CROSSRE	Cross reinforcement for swapbody
□	SRWL-PK	Chassis-mounted working lamps - Side work and reverse lamp preparation and 3 position switch - Max load 280W
□	SWL-2FW	Chassis-mounted working lamps - Two white front mounted LED lamps
□	SWL-2RW	Chassis-mounted working lamps - Two white rear mounted LED lamps
□	SWL-4W	Chassis-mounted working lamps - Four white front and rear mounted LED lamps
□	SWL-PK	Chassis-mounted working lamps - Side work lamp preparation and 2 position switch - Max load 280W
□	WLC-H2A	Working lamp back of cab - Two amber LED high mounted
□	WLC-H2W	Working lamp back of cab - Two white LED high mounted at the back of cab
□	WLC-PKCH	Working lamp back of cab - Preparation kit - cables and switch
□	WLC-PKH	Preparation kit, cables and switch for high mounted working lamps back of cab
□	WLC-PKL	Preparation kit, cables and switch for low mounted working lamps back of cab
□	WLC-PKLH	Preparation kit - cables and switch for low and high mounted working lamps back of cab.
□	ECBB-HIG	Bodybuilder module - High level body electrical centre in dash input/output module

■ Standard Equipment □ Optional Equipment

For more detailed information about cab and powertrain equipment, please refer to separate specification sheets.

For all possible options and combinations of options please consult your Volvo sales contact who can create a specification to match your requirements using the Volvo Sales Support system (VSS).

The factory reserves the right to modify design and change equipment without previous notification.
The specification can vary from country to country.

MODEL RANGE

FMX13 6x4 Rigid - Rear Air Suspension - N3 or N3G FMX 64R 3A

■	ECBB-MED	Bodybuilder module - Medium level body electrical centre in dash input/output module
□	BBCHAS1	One 7-pole connector for Body builder interface
□	BBCHAS3	Three 7-pole connectors for Body builder interface
□	BEPR-T2	Body builder electrical software preparation for tipper with remote control
□	EXSTER	External steering control - Volvo dynamic steering and bodybuilder module prepared for external control system, installed and computer by bodybuilder
■	TD-LED	Trailer detection with LED sensing
□	FRFS-BS	Frame rail free space - both sides to give space for crane legs or other equipment
□	FBA-BTF	Lower front body attachments for torsionally flexible - platform body
□	FBA-BTSF	Lower front body attachments for torsionally semi-flexible body - box or curtainsider
□	HBA-FSFB	Holes for body attachments - flexible/semi-flexible body
□	HBA-SB	Holes for body attachments - stiff body
□	RBA-T2	Lower rear body attachments for helper frame
□	CRANEPK1	Crane plates mounted to frame, for cranes up to 10 tonne metre capacity
□	CRANEPK2	Crane plates mounted to frame, for cranes up to 20 tonne metre capacity
□	CRANEPK4	Crane plates mounted to frame, for cranes up to 40 tonne metre capacity
□	AUXL-SPK	Electrical preparation kit - wiring and switch for snow plough lights
□	TAILPRE2	Tail lift preparation kit, wireless remote operation
□	TAILPREP	Taillift preparation kit - cab switch and warning in driver display
□	AESW2	Two Body builder bistable electrical switches (marked AUX1 / AUX2)
□	AESW2PK	2 Body builder bistable el.switches (marked AUX1/AUX2) and prep. for 4 more switches
□	AUXSW-4	Wiring for 4 extra switches (from Body builder electrical centre to switch positions)

DELIVERY SERVICES

■	TGW-4GWL	Telematics gateway - GSM/GPRS/4G modem, LTE & WLAN
□	FMS-PK	Fleet management system gateway - Required for aftermarket telematics
□	DRUT1	Driver utility app - "My Truck" - 1 year subscription For mobile phone, tablet, with android and IOS systems. Only available with Volvo Connect subscription
□	DRUT2	Driver utility app - "My Truck" - 2 year subscription For mobile phone, tablet, with android and IOS systems. Only available with Volvo Connect subscription
□	DRUT3	Driver utility app - "My Truck" - 3 year subscription For mobile phone, tablet, with android and IOS systems. Only available with Volvo Connect subscription
□	DRUT4	Driver utility app - "My Truck" - 4 year subscription For mobile phone, tablet, with android and IOS systems. Only available with Volvo Connect subscription
□	DRUT5	Driver utility app - "My Truck" - 5 year subscription For mobile phone, tablet, with android and IOS systems. Only available with Volvo Connect subscription