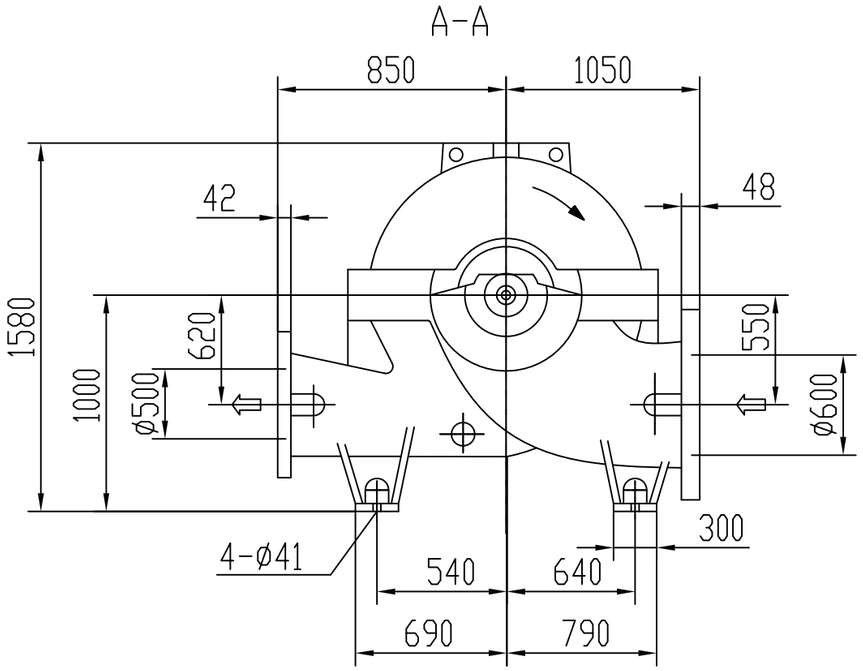

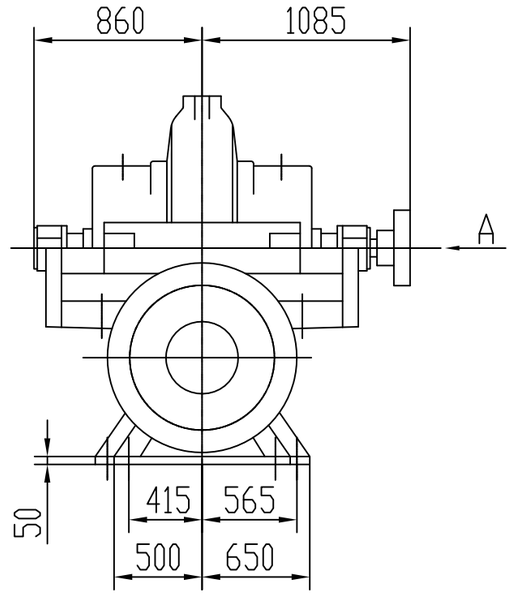

SUCTION FLANGE DIMENSION
DN 600 PN16 - DIN

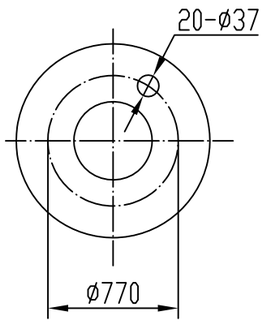

DISCHARGE FLANGE DIMENSION
DN 500PN16 - DIN

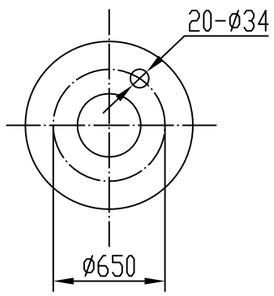

IT MOVES CW VIEWING FROM THE ACTUATION END

									SHANGHAI LIANCHENG(GROUP) CO.,LTD.
MARK	STAGE	SUBAREA	REVISEION NO.	SIGNATURE	DATE				INSTALLATION DIMENSION
DESIGNER			STANDARD			STAGE MARKER	WEIGHT	SCALE	
COLLATED BY									
CHECKED BY									SLOW500-710
PROCESS			APPR.BY			TOTAL PAGES		NO.	