Preface-About the product and manual

[Manual purpose]

This manual introduces the main features, performance, and working principle of the new generation of VCP series outdoor unit and provides users with information on usage, operation, and maintenance.

[User]

Technical Support Engineer
Maintenance Engineer

[Disclaimer]

1. Outside the free warranty period;
2. Disassemble or modify the product without authorization;
3. Violation of product operation or use specifications;
4. Man-made faults;
5. The product suffered losses caused by irresistible or other external factors on the client-side.

[Note: Any of the above exemption clauses will not be covered by the warranty.]

[Related description]

1. This manual is provided with the product, please keep it in a safe place so that you can check it at any time when you need it. In case this manual is accidentally lost or damaged, please obtain it directly from the manufacturer or local distributor;
2. This manual is written for VCP series outdoor unit products, and the content may not be applicable to other models;
3. Due to product version upgrades or other reasons, the content of this document will be updated from time to time.
   Unless otherwise agreed, this document is only used as a guide, and all reports, information, and suggestions in this document do not constitute any express or implied guarantee.
4. The copyright of this manual belongs to Shenzhen INVT Network Technology Co., Ltd., and all rights are reserved. The content is subject to change without notice.

CONTENTS

Chapter 1. Product Overview 1

Chapter 2. **Installation of outdoor unit** 8

2.2.1 Installation Environment 8

2.2.2 Installation method 8

2.2.3 Installation space 11

2.2.4 Fixation 13

2.2.5 Indoor and outdoor unit piping connection 13

2.2.6 Indoor and outdoor unit cable connection 13

2.2.7 Pressure-holding, leak detection, vacuuming 14

Chapter 3. Outdoor fan inverter 15

3.2.1 Port Settings 15

Chapter 4. Maintenance and Troubleshooting 17

4.1.1 Cooling system 17

4.1.2 Heat exchanger 17

4.1.3 Fan 17

4.1.4 Fan frequency converter 18

4.1.5 Pressure sensors 18

Appendix I Wiring diagram of VCP series conventional outdoor unit 20

Appendix II Low temperature component wiring diagram 21

Appendix III Harmful substances in products and content table 22

Annex IV Equipment Maintenance Checklist (Monthly) 23

Appendix 5 Equipment Maintenance Checklist (Annual) 24

Chapter 1. Product Overview

1.1 Product Description

VCP series outdoor unit, a new generation of high-efficiency and energy-saving precision air conditioner outdoor unit designed and developed by our company, is divided into two types: single-system and dual-system. The single system outdoor unit is used to match the single system indoor unit or the single cooling system of the dual system indoor unit. The dual system outdoor unit is used to match the indoor unit of dual system.。

Main features：

- ✓ Flexible installation form, supporting vertical air outlet and horizontal air outlet.
- ✓ Single and dual refrigerant circuits for various systems.。
- ✓ Reinforced heat transfer inner thread tube with optional high anti-corrosion fin coating.
- ✓ Marine grade corrosion resistant aluminum, solid structure and beautiful appearance.
- ✓ High quality and low noise frequency-controlled axial flow fan with built-in thermal protection.
- ✓ IPX5 standard electrical control box.
- ✓ Intelligent automatic stepless frequency conversion control of fan speed, high efficiency and energy saving, stable operation.

1.2 Model description

E g.：Model——VCP026SF

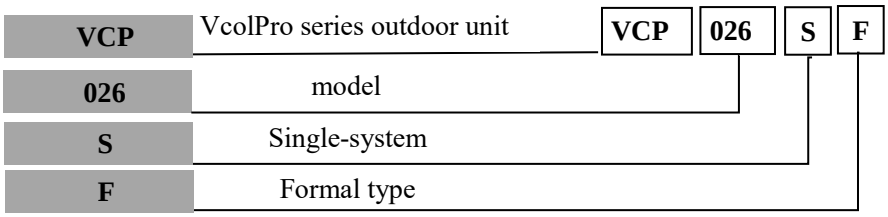

Figure 1-1 Naming rules for outdoor units

There are 15 models of outdoor units, including single-system outdoor units with heat transfer capacity covering 26-96kW and dual-system outdoor units with heat transfer capacity covering 56-96kW, and the specific models are shown in Table 1-1.

Table 1-1 Model List

Type / Num.	Single-system	Dual-system
1	VCP026SF	VCP056DF
2	VCP028SF	VCP066DF
3	VCP034SF	VCP076DF
4	VCP038SF	VCP088DF
5	VCP045SF	VCP096DF
6	VCP056SF	/
7	VCP066SF	/
8	VCP076SF	/
9	VCP088SF	/
10	VCP096SF	/

1.3 Product Composition

The outdoor unit consists of heat exchanger, axial flow fan, fan inverter, pressure sensor, etc. The appearance and location of outdoor unit components are shown in Figure 1-2~Figure 1-3. Where 1 - axial fan; 2 - electric control box; 3 - heat exchanger; 4 - pressure sensor. If the outdoor ambient temperature is lower than -15℃, it is necessary to use with the low-temperature component, and the appearance of the low-temperature component is shown in Figure 1-4.

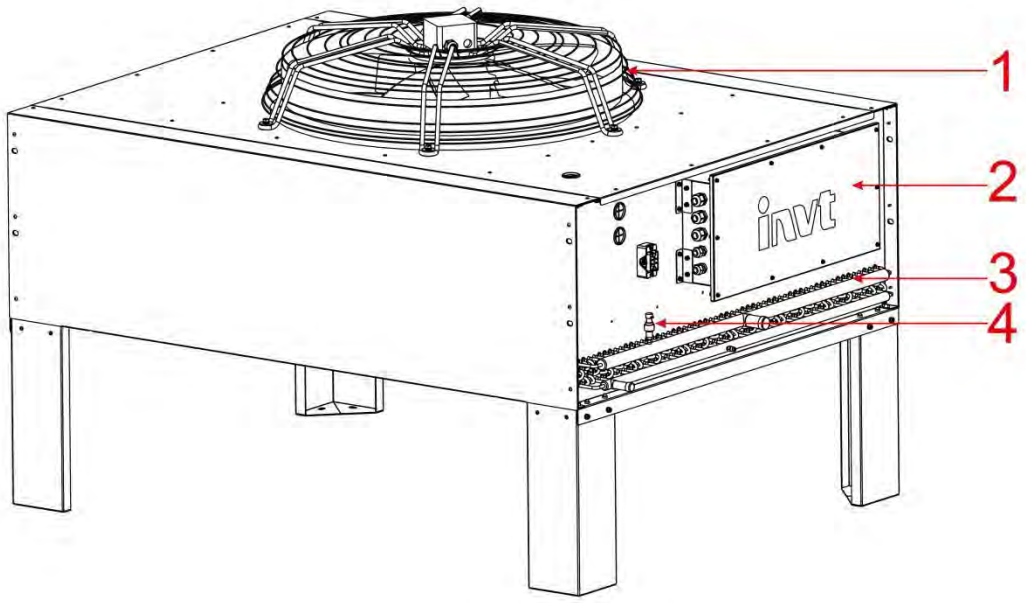

Figure 1-2 Outdoor unit single system schematic (single fan)

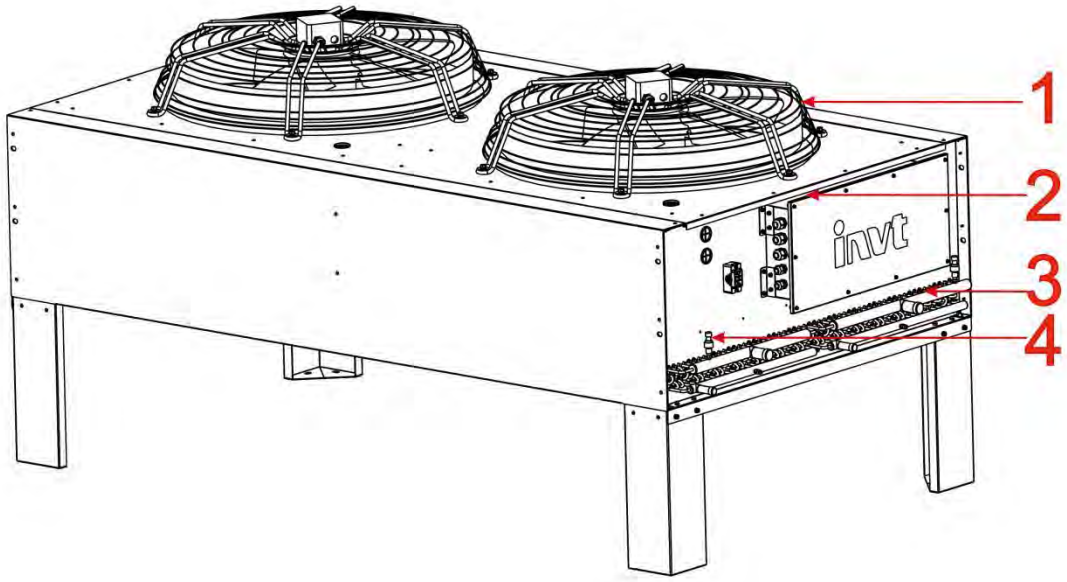

Figure 1-3 Outdoor unit dual system schematic (dual fans)

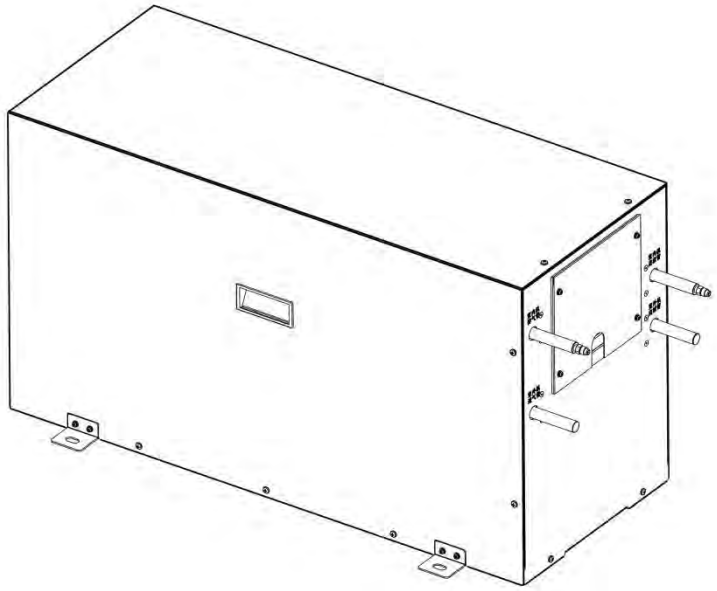

Figure 1-4 low-temperature component schematic

✧ **Note**

The single system outdoor unit is equipped with 1 low temperature component, and the dual system outdoor unit is equipped with 2low temperature components.

1.4 Technical parameters

The dimensions of the outdoor unit are shown in Figure 1-5, and the specific structural parameters are shown in Table 1-2.

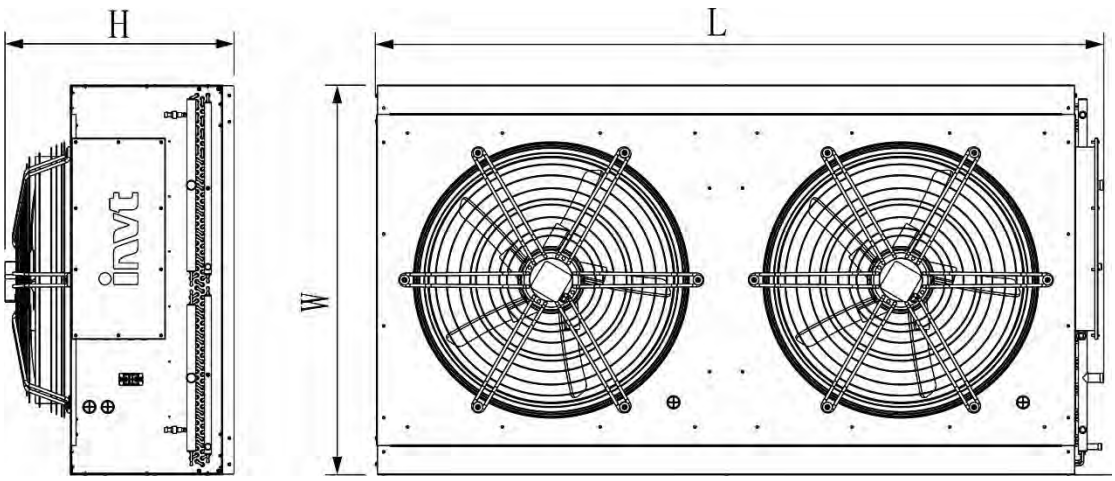

Figure 1-5 Outdoor unit structure schematic

Table 1-2 Structure parameters

Model	Fan number（PCS）	Weight（kg）	Size（mm）			Liquid tube connector（mm）	Gas tube connector（mm）
			L	W	H		
VCP026SF	1	112	1378	982	740	16	22
VCP028SF	1	120	1378	982	740	19	22
VCP034SF	1	128	1378	982	740	19	22
VCP038SF	1	136	1378	982	740	19	28
VCP045SF	1	138	1578	1275	750	19	28
VCP056SF	1	152	1778	1275	750	19	28
VCP066SF	2	168	1978	1275	740	19	28
VCP076SF	2	178	2178	1275	740	19	28
VCP088SF	2	188	2378	1275	750	19	28
VCP096SF	2	198	2578	1275	750	19	28
VCP056DF	1	156	1778	1275	750	16	22
VCP066DF	2	169	1978	1275	740	19	22
VCP076DF	2	179	2178	1275	740	19	28
VCP088DF	2	189	2378	1275	750	19	28
VCP096DF	2	199	2578	1275	750	19	28

The outdoor unit needs to be equipped with low temperature components when the outdoor temperature is lower than -15℃, the size of the low temperature components is as follows Figure 1-6, and the specific structure parameters are shown in Table 1-3.

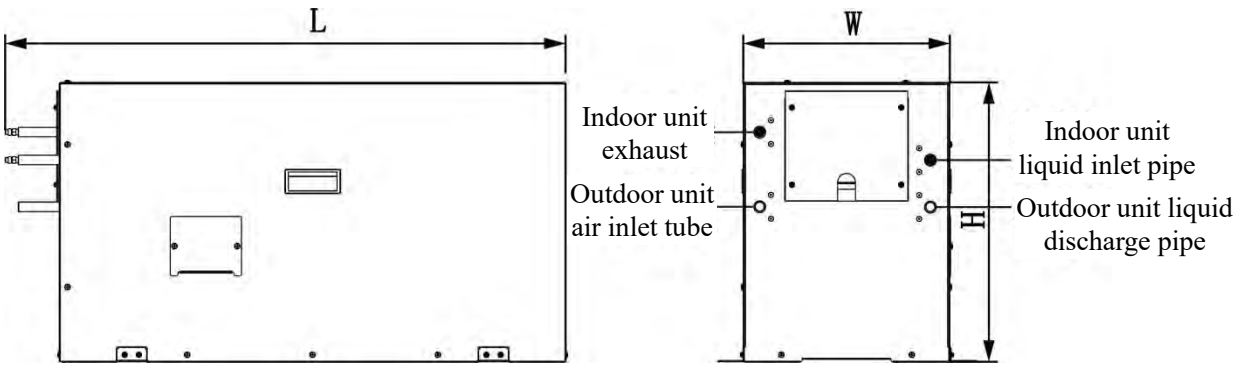

Figure 1-6 Schematic diagram of low-temperature component

Table 1-3 Low temperature component structure parameters

Model	Size (mm)			Applicable models
	L	W	H	
VCL01O-01	945	348	470	VCP026、VCP028、VCP034、VCP038、VCP045
VCL02O-01	870	363	536	VCP056、VCP066、VCP076、VCP088、VCP096

✧ **Note**

1) Dual system outdoor units are equipped with 2 low temperature components.
2) The low temperature component should not be more than 2m away from the outdoor unit.
3) When the outdoor unit is installed vertically, it is forbidden to put the low-temperature component in the air outlet.
4) When the outdoor unit is installed horizontally, the outdoor unit and the low-temperature component must be placed on the same height base or concrete support platform, as shown in Figure 1-7; when the outdoor unit is installed vertically, the outdoor unit can be at most 1.5m higher than the low-temperature component and cannot be lower than the low-temperature component, as shown in Figure 1-8.

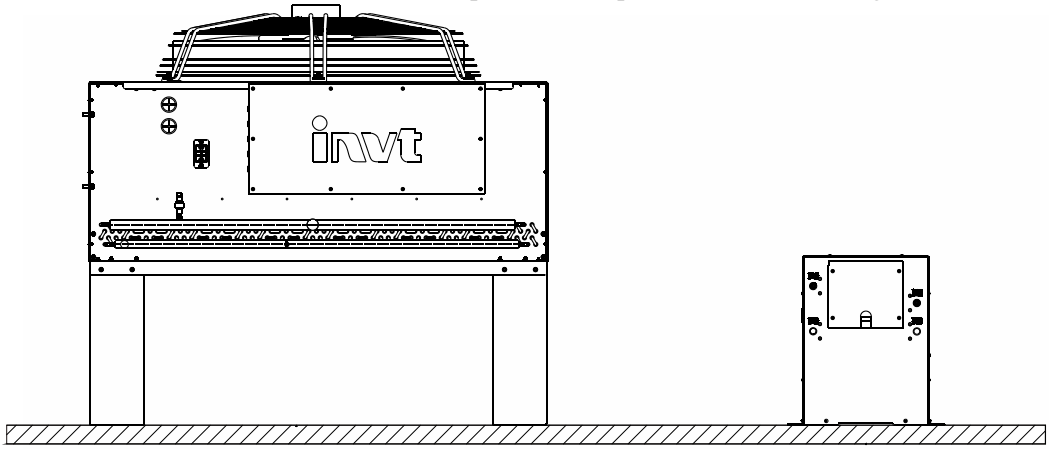

Figure 1-7 Schematic diagram of horizontal installation of low-temperature components

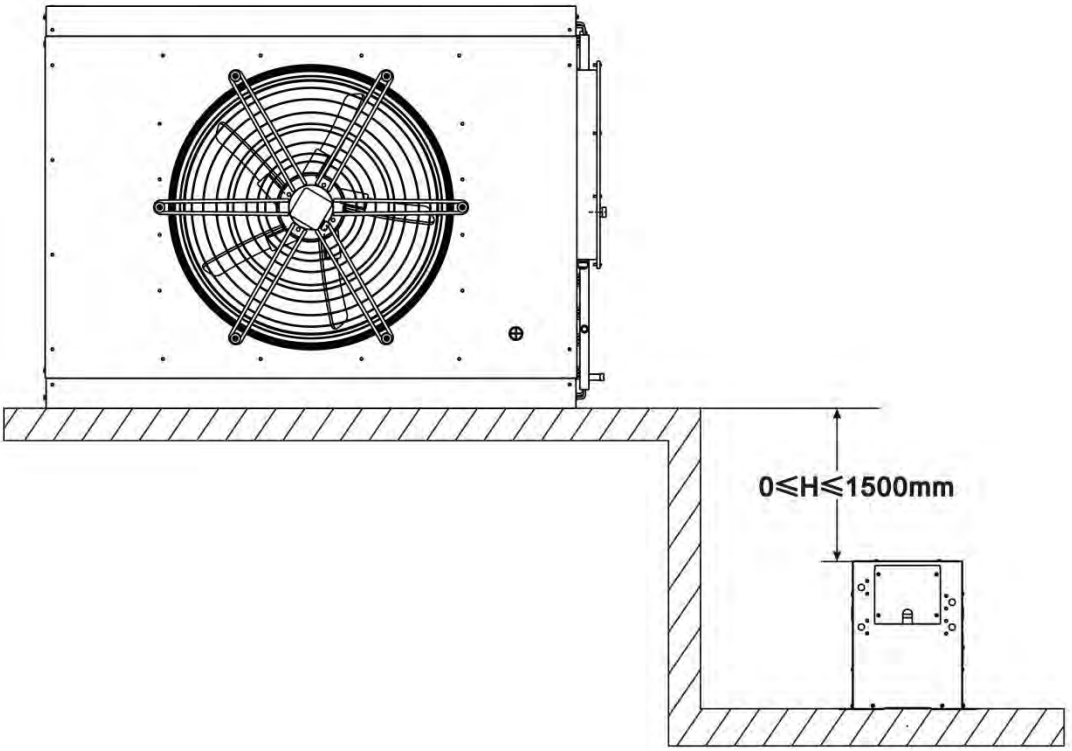

Figure 1-8 Schematic diagram of vertical installation of low-temperature components

1.5 Storage requirements

Outdoor machine storage environment should meet the requirements of Table 1-4.

Table 1-4 Storage requirements

Content	Requirements
Storage environment	Indoor, clean (no dust etc.)
Ambient Temperature	－20℃～54℃
Ambient humidity	5%RH～85%RH（No condensation）
Storage Time	Transport and storage time should not exceed 6 months in total, after 6 months the performance needs to be re-calibrated.

1.6 Operating environment requirements

The operating environment of VCP series air-cooled outdoor units should meet the requirements of Table 1-5.

Table 1-5 Operating environment requirements

	Requirement
Installation Location	Equivalent distance between indoor unit and outdoor unit in standard configuration is 30m, height difference ΔH: -5m ≤ ΔH ≤ 20m; installation method: horizontal or vertical installation.
Ambient temperature	Outdoor：-15℃～+45℃，-34℃～-15℃Additional low temperature component are required.
Ambient Humidity	Outdoor unit：5%RH～95%RH(No condensation)。
Operating power supply	380V±10％，50/60Hz。
Altitude	No more than 1000m, and deratied is required for more than 1000m.
Protection class	The whole machine is IPX5.
Notes. "ΔH": outdoor unit is higher than indoor unit for positive drop, and vice versa for negative drop.	

Notes

1) When the equivalent distance between indoor unit and outdoor unit in standard configuration is within 30m, please refer to the specific requirements for refrigerant and connection pipe equivalent length in the user manual of indoor unit.
2) When the equivalent distance between indoor unit and outdoor unit in standard configuration exceeds 30m, please consult the relevant technical department.

Chapter 2. **Installation of outdoor unit**

2.1 Unpacking inspection

a）Upon receipt of shipment of the outdoor unit, inspect all parts for obvious damage. If any parts are found to be missing or damaged, they should be reported to the carrier immediately.

b）After confirming that all parts of the outdoor unit are normal, remove the packaging of the outdoor unit and remove the four fixing nuts. Then carry the outdoor unit to the installation site.

✧ **Note**

1) If the outdoor unit is placed vertically, the legs need to be installed before they are placed vertically.
2) Check whether the pressure value of outdoor unit is in the normal range.
3) When handling the outdoor unit, do not use the copper tube or electric control box as the stress point, and focus on protecting the fins from damage.

2.2 Installation requirements

2.2.1 Installation Environment

1. To ensure the heat dissipation performance of the outdoor unit, please install the outdoor unit in a ventilated place with smooth air inlet and outlet, and avoid places where dust, snow, etc. may cause blockage of the outdoor unit coil, and ensure that there is no steam, waste heat, acidic or alkaline gas, etc. around the unit.
2. Try to install the outdoor unit far enough away from the residential area to avoid noise nuisance, please refer to the local environmental protection standard requirements for the specific installation distance.
3. Please refer to the installation arrow mark on the outdoor unit for installation direction.
4. When installed on the roof, attention should be paid to the load-bearing of the floor slab, protection of the waterproof layer of the roof and compliance with local regulations.
5. Be sure not to make the arc welding ground contact with the outdoor unit to avoid arcing through the welded joints in the coil.

2.2.2 Installation method

2.2.2.1 Vertical mounting base

The vertical mounting base is shown in Figure 2-1, and the specific base size/mounting hole size for each model is shown in Table 2-1.

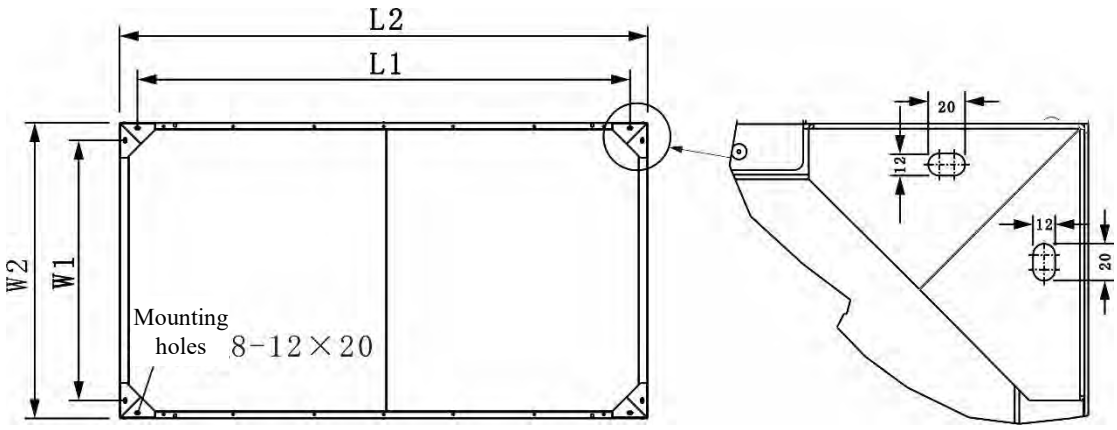

Figure 2-1 Dimensional drawing of vertical mounting base

Table 2-1 Vertical mounting base/mounting hole dimensions (unit: mm)

Model	L1	L2	W1	W2
VCP026SF	1126	1276	825	975
VCP028SF	1126	1276	825	975
VCP034SF	1126	1276	825	975
VCP038SF	1126	1276	825	975
VCP045SF	1326	1476	1120	1270
VCP056SF	1526	1676	1120	1270
VCP066SF	1726	1876	1120	1270
VCP076SF	1926	2076	1120	1270
VCP088SF	2126	2276	1120	1270
VCP096SF	2326	2476	1120	1270
VCP056DF	1526	1676	1120	1270
VCP066DF	1726	1876	1120	1270
VCP076DF	1926	2076	1120	1270
VCP088DF	2126	2276	1120	1270
VCP096DF	2326	2476	1120	1270

✧ **Note**

The mounting holes are waist-shaped holes, and bolts need to be used to fix the mounting base.

2.2.2.2 Horizontal mounting base

The dimensions of the horizontal mounting base and parts are shown in Figure 2-2, where the length dimensions of each model are shown in Table 2-2.

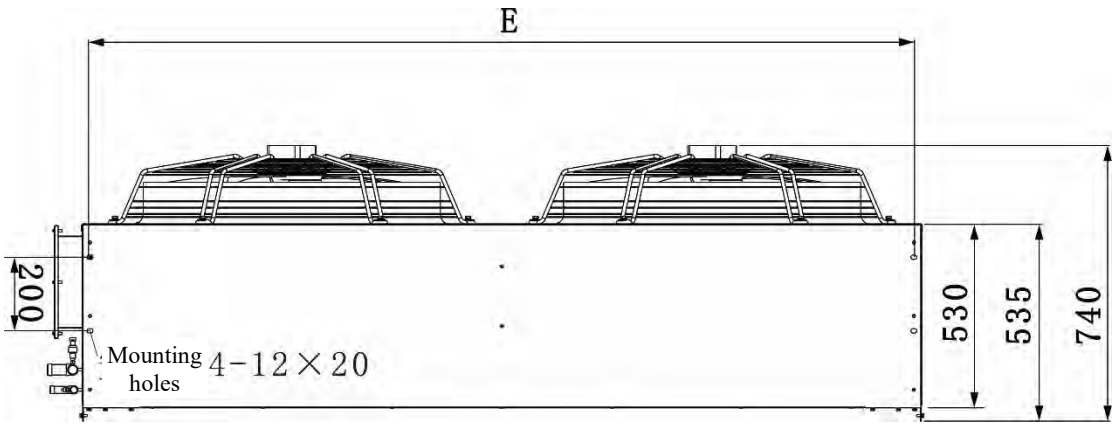

Figure 2-2 Dimensional drawing of horizontal mounting base (bottom view)

Table 2-2 Horizontal mounting base/mounting hole dimensions (unit: mm)

Model	E
VCP026SF	1240
VCP028SF	1240
VCP034SF	1240
VCP038SF	1240
VCP045SF	1440
VCP056SF	1640
VCP066SF	1840
VCP076SF	2040
VCP088SF	2240
VCP096SF	2440
VCP056DF	1640
VCP066DF	1840
VCP076DF	2040
VCP088DF	2240
VCP096DF	2440

✧ **Note**

The mounting holes are waist-shaped holes, and bolts need to be used to fix the mounting base.

2.2.2.3 Low temperature component mounting base

The dimensions of the low temperature component mounting base and parts are shown in Figure 2-3, where the specific dimensions of each model are shown in Table 2-3.

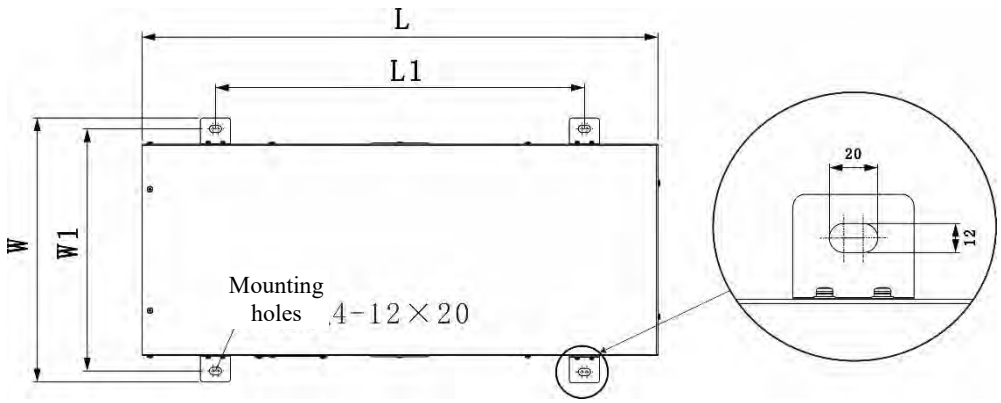

Figure 2-3 Dimensional drawing of low temperature component mounting base (unit: mm)

Table 2-3 Mounting hole size (unit: mm)

Model	L	L1	W	W1
VCL01O-01	853	610	435	400
VCL02O-01	778	578	450	414

2.2.3 Installation space

There should be sufficient installation and maintenance space around the outdoor unit installation location.

✧ **Space requirements**

1) Outdoor units require a maintenance space of at least 600mm in front and behind.
2) No obstruction within at least 3000mm of the outdoor unit outlet refer to Figure 2-4, Figure 2-5.
3) When an outdoor unit is placed on top of another outdoor unit, the above outdoor unit must be installed on the bracket and a cushion must be added between the unit and the bracket to play the role of vibration isolation. The correct operation is shown in Figure 2-6.
4) Please refer to Figure 2-7 for the schematic diagram of low temperature component installation.

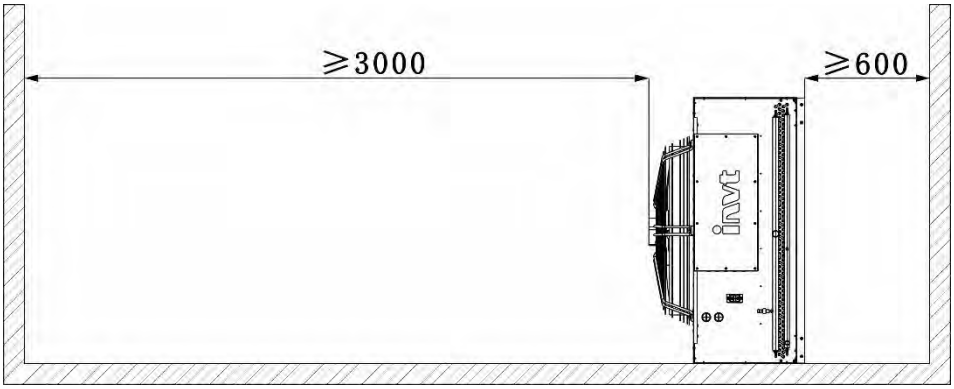

Figure 2-4 Horizontal installation space requirements (unit: mm)

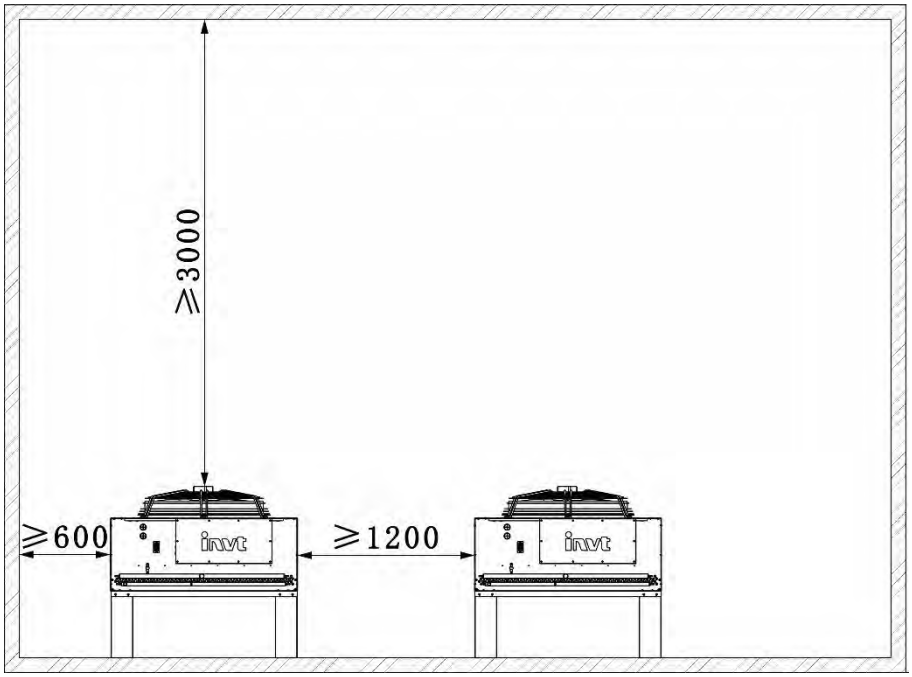

Figure 2-5 Vertical installation space requirements (unit: mm)

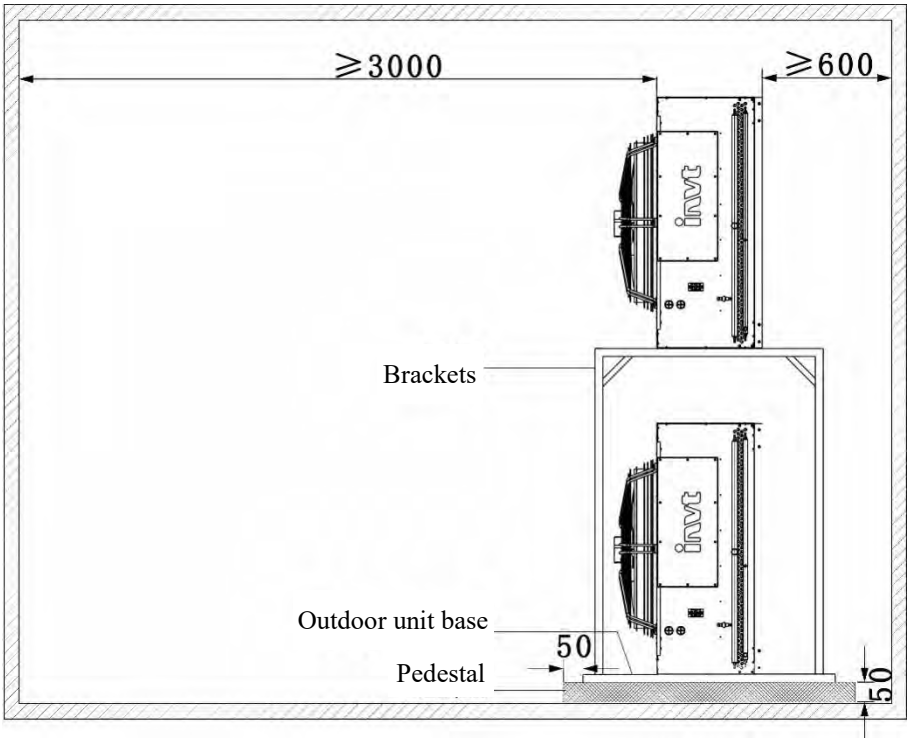

Figure 2-6 Two outdoor units stacked schematic (unit: mm)

✧ **Space requirements**

Outdoor machine base edge from its lower base edge distance of at least 50 mm, the base thickness of not less than 50 mm.

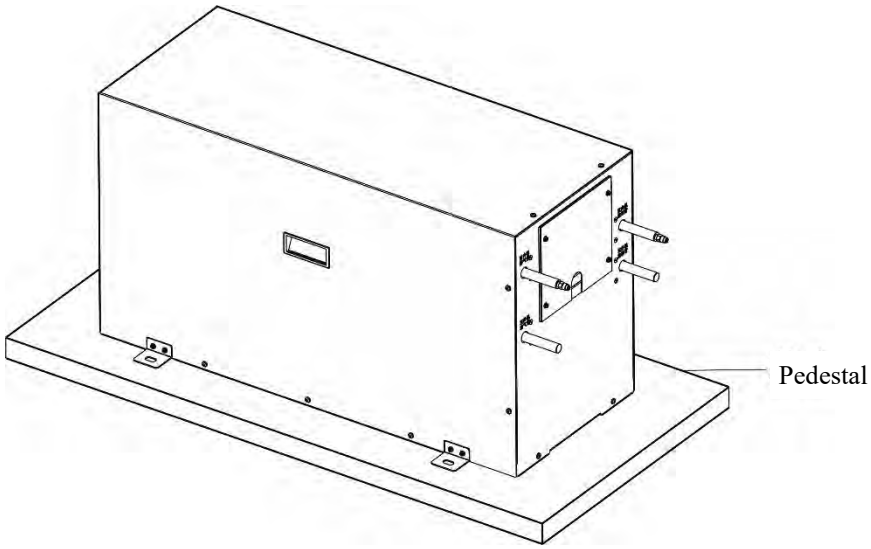

Figure 2-7 Low temperature component installation diagram

2.2.4 Fixation

After the installation location and installation method of outdoor unit is determined, carry the outdoor unit to the installation location and fix it with M10×30 screws or expansion screws. The installation should be firm, and stainless steel screws are recommended.

2.2.5 Indoor and outdoor unit piping connection

Please refer to the relevant mechanical installation guidelines in the indoor unit user manual.

2.2.6 Indoor and outdoor unit cable connection

2.2.6.1 Determine the cable specification

Select the power supply cable and signal cable specifications according to the rated operating current of the fan (see Table 2-1) and installation distance and other site factors.

Table 2-1 Recommended cable diameter for outdoor unit

Outdoor unit model	Fans Number（PCS）	Full load current（A）	Recommended Power Cable Specifications（mm^2）	Recommended Signal Cable Specifications（mm^2）
VCP026SF/VCP028SF/ VCP034SF/VCP038SF VCP045SF/VCP056SF/VCP056DF	1	2.5	4×1.0	2×0.5
VCP066SF/VCP076SF/VCP088SF/ VCP096SF/ VCP066DF/VCP076DF VCP088DF/VCP096DF	2	5	4×2.5	2×0.5

✧ **Note**

The outdoor portion of the cable connecting the indoor unit to the outdoor unit requires the use of a protective tube.

2.2.6.2 Connection cables

Outdoor unit: users follow the wiring label as shown in Figure 2-8 below, the power line (PE/L1/L2/L3) and signal line (AL/AL) from the indoor unit control box outdoor unit output interface to the outdoor unit corresponding terminals, wiring work is complete, indoor unit outdoor unit output interface details, please refer to the indoor unit user manual.

PE	L1	L2	L3	AL	AL
Outdoor unit power supply: 380V, 50/60Hz 3~					

Figure 2-8 Outdoor unit wiring cross-reference diagram

Low temperature components: Users follow the wiring label as shown in Figure 2-9, the indoor unit control box low temperature component terminals (SV/SV/PE/HE/HE) wired to the corresponding low temperature component terminals, wiring work is complete, indoor unit and outdoor unit output interface details, please refer to the indoor unit user manual.

SV	SV	PE	HE	HE

Figure 2-9 Low temperature component wiring cross-reference diagram

✧ **Note**

1) In order to ensure the high waterproof performance of the electric control box, it is necessary to glue the waterproof joints after the external power supply is connected.
2) When used in low temperature environment, the dual system outdoor unit is equipped with 2 sets of low temperature components, wiring attention to distinguish between system No. 1 and system No. 2.
3) The cable should not be in contact with high temperature objects (such as uninsulated copper pipes, water pipes, etc.) to avoid damaging the insulation layer.
4) Please observe local regulations for wiring.

2.2.7 Pressure-holding, leak detection, vacuuming

See the relevant section of the indoor unit user manual for instructions.

Chapter 3. Outdoor fan inverter

3.1 Product Description

H-type inverter is a special inverter tailored for outdoor fans. Adopting frequency conversion speed control device, it intelligently adjusts fan speed to match system heat dissipation demand in real time, with low operating energy consumption and high comprehensive efficiency.

3.2 H type fan inverter

3.2.1 Port Settings

The wiring terminals are located on the control board of the fan electric control box, and their distribution is shown in Figure 3-4 and Figure 3-5, and the specific definitions are shown in Table 3-4.

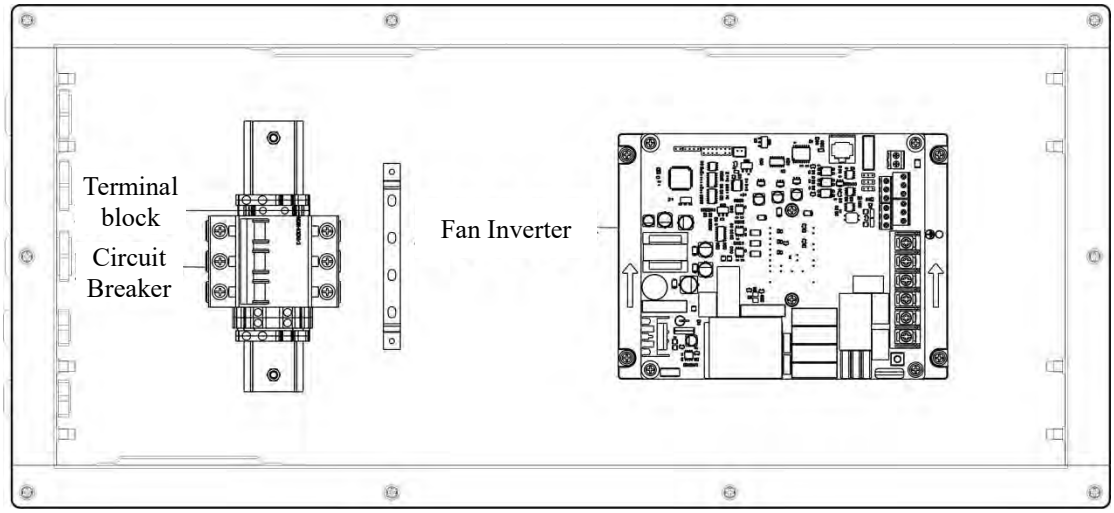

Figure 3-4 Outdoor unit electric control box

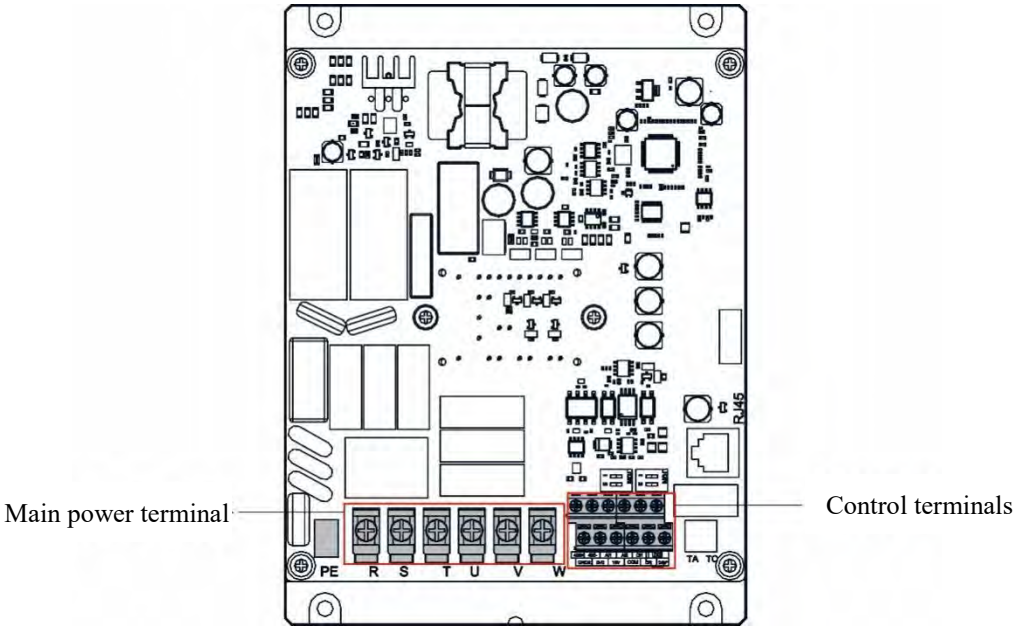

Figure 3-5 H-type inverter diagram

Table 3-4 H-type inverter port configuration

Terminal Symbols	Terminal name and function description	Remarks
R、S、T	Power terminal input : R：Connect power L1 S：Connect power L2 T：Connect power L3 Ground: Connect to power ground	Do not connect the power zero line to the ground line
U、V、W	Output terminals : U：Connecting motor U V：Connecting motor V W：Connecting motor W	According to the correct phase sequence to prevent the motor from reversing
485+、485-	485 Communication Port	-
AI1、AI2	2 analog inputs（0-5VDC/10VDC）	
DI1	1 digital input terminal (opto-isolated)	
OP	1 way relay output DO（250VAC/300VAC 1A）	
5V2	1 way 5VDC	
PE	Ground terminal	-

Chapter 4. Maintenance and Troubleshooting

The good or bad performance and long life of the unit have an important relationship with your maintenance of the unit. Please check the outdoor unit regularly and maintain it promptly after problems arise.

✧ **Note**

1) Equipment maintenance must be done by professional operators.
2) Except for the items that need to be commissioned with electricity, the power of the indoor unit must be cut off and the air switch of the outdoor unit must be disconnected during maintenance.
3) When troubleshooting, if you encounter a fault that cannot be judged, please consult the company's technical staff in time.

4.1 Maintenance

4.1.1 Cooling system

1) Check whether the refrigeration piping is solid. Otherwise, a fastening object should be used so that the refrigeration piping does not vibrate with the wall, floor or equipment frame.
2) Carefully check all cooling pipes and fittings for oil stains to ensure there are no leaks.

4.1.2 Heat exchanger

1) Clean the heat exchanger fins and coils regularly.
2) If the outdoor unit heat exchanger fins are dirty and blocked, we should be cleaned with compressed air or fin cleaning agent (weak alkaline). When using compressed air to clean the fins, the blowing direction should be in the reverse airflow direction.
3) Check whether the fins are inverted or damaged, and maintain them in time if they are.
4) Snow accumulation should be avoided in winter to affect the air intake of the outdoor unit.

4.1.3 Fan

Observe whether the fan runs normally and whether there is any abnormal noise, vibration, bearing seizure and other problems.

4.1.4 Fan frequency converter

Check if the fan inverter is working properly. If it is not normal, please repair or replace it in time. See Chapter 3, Fan Inverter Setting and Use and other related contents for the inspection and repair method.

4.1.5 Pressure sensors

If the pressure sensor fails, replace it with a voltage type pressure sensor that meets the requirements for use.

✧ **Note**

1) The outdoor units are shipped with voltage type pressure sensors, so we suggest you to buy them directly from our company.
2) If users choose other voltage pressure sensors, the selection must meet the requirements of use.

4.2 Troubleshooting

H type inverter, when the outdoor unit is malfunctioning, please refer to the fault code descriptions and solutions in Table 4-1 to deal with it, if you cannot troubleshoot, please seek technical support from our company.

Table 4-1 H-type fan inverter troubleshooting table

Fault name	Exclusion method
Accelerated overcurrent	Ground or short circuit exists in the output circuit of the inverter
	Rapid acceleration conditions, acceleration time setting is too short
	Inappropriate setting for overrun speed suppression
	Start-up of rotating motors
Deceleration overcurrent	Ground or short circuit exists in the output circuit of the inverter
	The setting of deceleration time is too short for acute deceleration condition
	Inappropriate setting for overrun speed suppression
Constant speed overcurrent	Ground or short circuit exists in the output circuit of the inverter
	Inappropriate setting for overrun speed suppression
	Inverter selection is small
Accelerated overvoltage	High input voltage
	External force is present during acceleration to drag the motor to run
	Improper overvoltage suppression setting
	Acceleration time is too short
Deceleration overvoltage	Improper overvoltage suppression setting
	There is an external force dragging the motor during the speed reduction process
	Deceleration time is too short
Inverter overload	Whether the load is too large or the motor is blocked
	Inverter selection is small
Motor overload	Is the motor protection parameter F9-01 set appropriately
	Whether the load is too large or the motor is blocked
Input out of phase	Three-phase input power is not normal
	Driver board, lightning protection board, main control board, rectifier bridge abnormal
Current detection fault	Driver board abnormality
Motor phase-to-phase short circuit	Two-phase short circuit in output UVW

Appendix I Wiring diagram of VCP series conventional outdoor unit

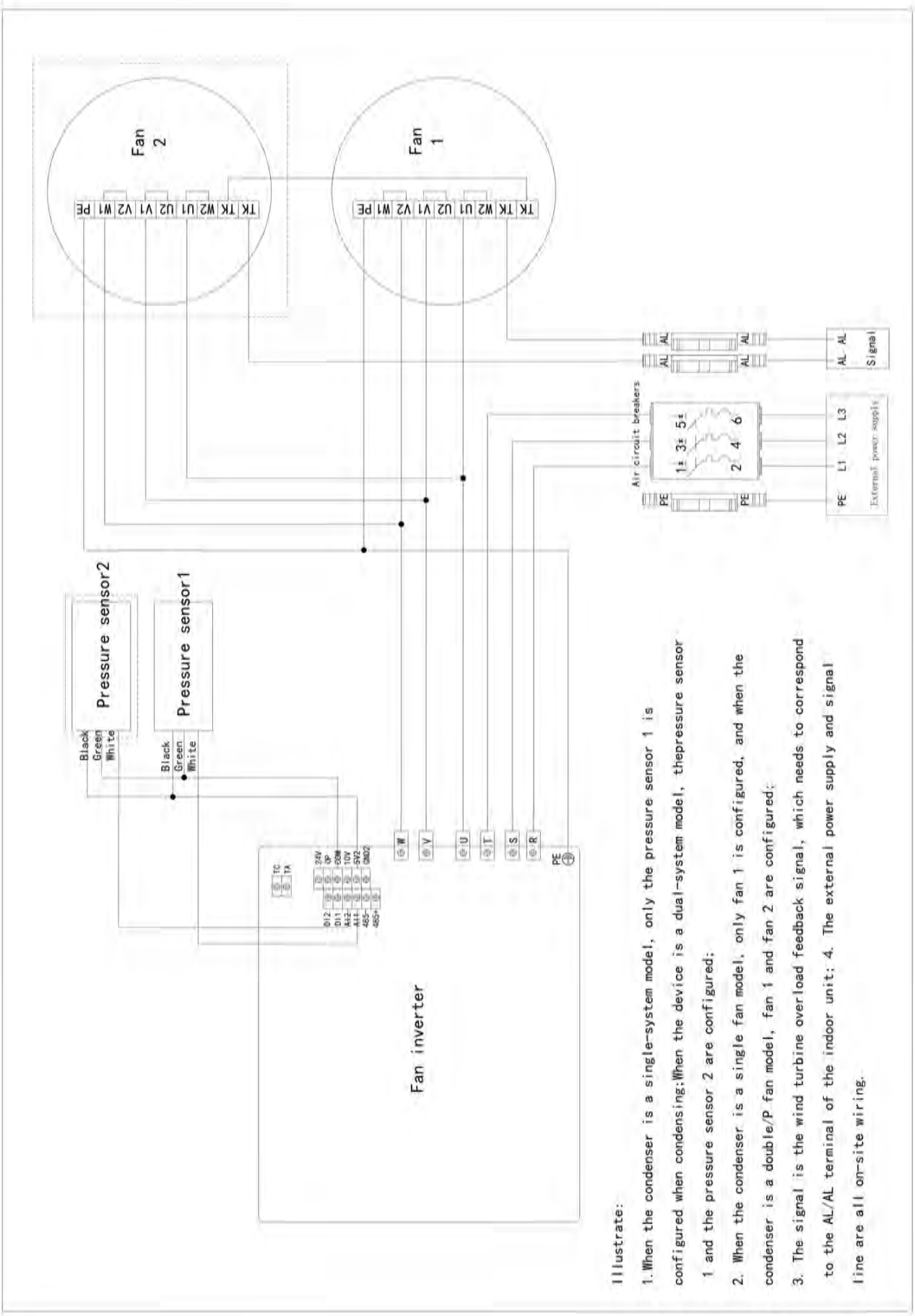

Appendix II Low temperature component wiring diagram

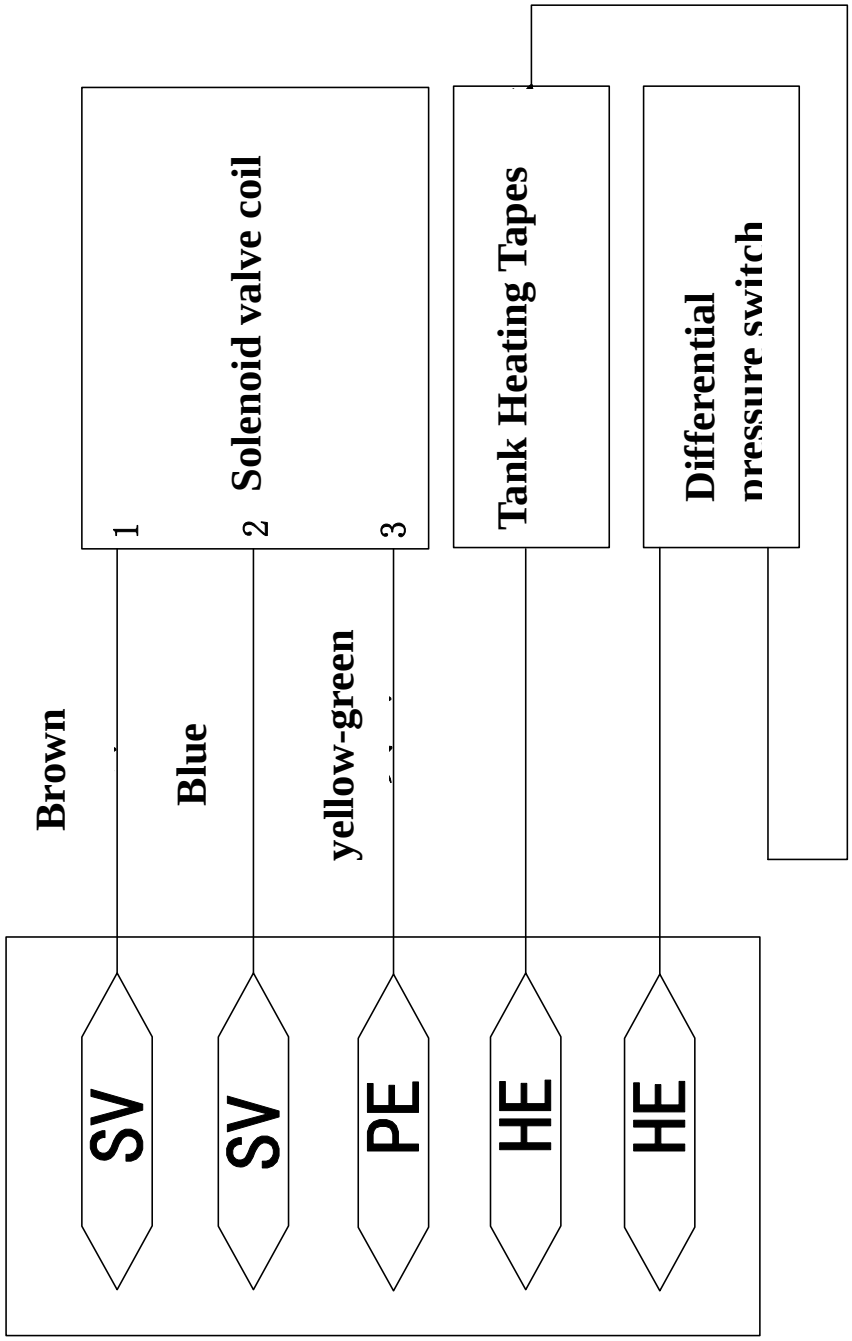

Appendix III Harmful substances in products and content table

Part Name	Harmful materials					
	Pb	Hg	Cd	Cr（VI）	PBB	PBDE
Cabinet	×	○	○	○	○	○
Cooling accessories	×	○	○	○	○	○
Fan units	×	○	×	○	○	○
Heating unit	×	○	○	○	○	○
Electronic control unit	×	○	×	○	○	○
Display screen	×	×	○	○	○	○
Made into board	×	○	○	○	○	○
Heat Exchanger	×	○	○	○	○	○
Copper tube	×	○	○	○	○	○
Cable	×	○	○	○	○	○

This form is compiled in accordance with the provisions of SJ/T 11364.

O：Indicates that the content of the toxic and hazardous substance in all homogeneous materials of the part is below the limit requirement specified in GB/T 26572;

X： Indicates that the content of the toxic and hazardous substance in at least one of the homogeneous materials of the part exceeds the limit requirement of GB/T 26572.

The following components or applications containing toxic and hazardous substances are limited to the current technical level and cannot be reliably replaced or there is no mature solution:

1．The reasons for the lead content in the above components: the copper alloy of the parts contains lead; the high temperature solder contains lead; the high temperature solder in the diode contains lead; the resistance body glass uranium contains lead (exempt); the electronic ceramic contains lead (exempt);

2．The backlight tube contains mercury;

3．The switch contacts of the power distribution section contain cadmium and its compounds.

Note on the environmental protection use period: The environmental protection use period of this product (marked on the product body) refers to under normal use conditions and compliance with safety precautions of this product, from the date of production, the toxic and hazardous substances or elements contained in this product (except batteries) will not have a serious impact on the environment, people, and property.

Scope of application: VCP series outdoor unit

Annex IV Equipment Maintenance Checklist (Monthly)

Component	Check content	Remark
Fan	Confirm that the fan net cover is not deformed	
	Confirm whether the fan blades are damaged	
	Confirm that the fan is fixed and not loose	
	Confirm that the fan is running without abnormal noise	
	Confirm that the fan circuit connector is not loose	
Air-cooled condenser	Confirm that the condenser fins are not dirty and blocked	
	Confirm that the condensing fan is tightly fastened and not loose	
	Confirm that the condensing fan is not damaged	
	Confirm that the condensing fan circuit connector is not loose	

Date:

Device model:

Checker:

Appendix 5 Equipment Maintenance Checklist (Annual)

Component	Check content	Remark
Fan	Confirm that the fan net cover is not deformed	
	Confirm whether the fan blades are damaged	
	Confirm that the fan is fixed and not loose	
	Confirm that the fan is running without abnormal noise	
	Confirm that the fan circuit connector is not loose	
Air-cooled condenser	Confirm that the condenser fins are not dirty and blocked	
	Confirm that the condensing fan is tightly fastened and not loose	
	Confirm that the condensing fan is not damaged	
	Confirm that the condensing fan circuit connector is not loose	
Electric control system	Confirm that the electric heater circuit connector is not loose	
	Confirm that the wiring of electrical components is not loose	
	Confirm that the cables are not aging	
	Confirm that the contactor and relay coil are working properly	

Date:

Device model:

Checker: