Trusted Provider of Network Power Solution

INVT Network Power Solution

INVT Network Power (Shenzhen) Co.,LTD
Tel: (86-755)26782480
Fax: (86-755)26782664
E-mail: networkpowersales@invt.com.cn
Http: www.invt-networkpower.com
Add: 6th Floor,INVT Guangming Technology Building,Songbai Road,Matian,
Guangming District,Shenzhen,China,518106

Official website

Wechat official accountount

INVT Copyright
Information may be subject to change without notice during product improving

202308(V2.2)

INVT NETWORK POWER (SHENZHEN) CO.,LTD.

Stock code: 002334

Company Profile

INVT Network Power (Shenzhen) Co., Ltd. is a subsidiary of Shenzhen INVT Electric Co., Ltd. (stock code: 002334), focusing on the R&D, production and application of integrated solutions for key infrastructure of data centers. We empower the construction of informatization and provide a safe, reliable, technologically advanced, intelligent, flexible, green, energy-saving, and economical and applicable data center key infrastructure "base" for data transmission, calculation, and storage.

Focusing on R&D and production of micro-modules, environmental refrigeration, and intelligent monitoring, integrating power distribution, UPS, batteries, etc., INVT Power provides you with four "Smart" series of integrated data center solutions. According to the relevant standards of GB50174 and TIA-942, the standardized and modular design is fully adopted to realize the advantages of rapid deployment, flexible expansion, intelligent operation and maintenance, and green efficiency.

Our team has more than 15 years of experience in data center industry and has a thorough understanding of the data center industry. We have rich experience in research and development, strong technical capabilities, and advanced technical concepts. It has advanced informatization and intelligent supply chain management methods and service capabilities such as MES production, ERP planning, OA office, PDM data management, CRM customer relations, and TMS logistics management.

We will make every effort to provide value-for-money products and services, and make customers more competitive as our mission.

CONTENTS

iSmart Series Single Cabinet Data Center ---------- Page 03-06
iWit Series Single Row Cabinet Data Center ---------- Page 07-10
iTalent Series Dual Row Cabinet Data Center ---------- Page 11-14
iLegend Series Container Data Center ---------- Page 15-18
eSite Monitoring System ---------- Page 19-20
VCS Series Rack Air Conditioner ---------- Page 21-24
VCR Series In-row Air Conditioner ---------- Page 25-28
VCA Series Small Room Air Conditioner ---------- Page 29-32
VCA Series Large Room Air Conditioner ---------- Page 33-36
VCP Series Air Conditioner Outdoor Unit ---------- Page 37-38
Integrated Power Distribution Cabinet ---------- Page 39-40
Applications ---------- Page 41-44

Micro-module data center integrated solution application advantages

Productized and standardized design

The overall construction is based on GB50174/TIA-942 and other standards, and based on the principles of high security, high stability, easy maintenance, scalability, high availability, applicability, versatility, manageability, economy, energy saving and environmental protection, etc. The product design is standardized and modularized to achieve factory prefabrication and rapid on-site assembly and deployment.

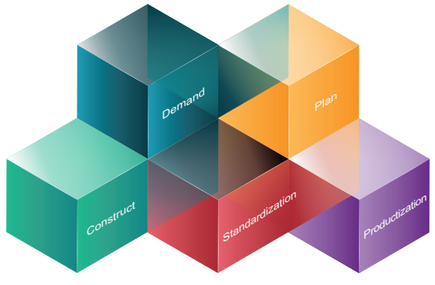

On-demand configuration and flexible deployment

INVT's micro-modular data center adopts productized, standardized and modularized architecture, which eliminates the need of investing in physical infrastructure in one step at the beginning when building data center infrastructure investment. Instead, only the required scale of data center needs to be deployed in initial construction, and later, as business grows, it can be flexibly deployed and adjusted like building blocks.

Save initial investment TCO

The standardized and modular architecture design of INVT's micro-modular data center means that when building the physical infrastructure of the data center, the infrastructure investment does not need to be made in one step, which saves the initial investment cost. Avoiding one-time investment in infrastructure equipment such as cooling, power supply, racks, etc. takes up a lot of money and can result in high resource idle rate. Instead, only deploy data centers of the required size according to current business needs. Then, with the development of business needs and expansion as needed, cooling, power supply, racks and other equipment can be invested in phases, which greatly reduces initial construction costs, and saves wasted resources, and effectively improves resource utilization, and can reduce overall operating costs by about 10%. The initial construction of the data center only needs to reserve the basic water and electricity level connections for subsequent expansion.

Green energy-saving, efficient operation

With the ability to deploy flexible, on-demand data centers, INVT micro-modular data centers ensure that data center infrastructure is planned on demand, ensuring maximum efficiency and minimal energy consumption throughout the data center's lifecycle, ultimately resulting in efficient operations.

The design of INVT micro-modular data center adopts standardized and modular design, as well as the joint application of various energy-saving technologies such as closed hot and cold aisles, modular UPS, in-row cooling, and natural cooling linkage, to truly achieve green energy-saving and efficient operation.

Save floor space and increase installed capacity

The installed capacity of a single rack in an INVT micro-module data center can be more than 6-10kw, while the installed capacity of a single rack in a traditional data center is between 3-5kw. Therefore, using micro-modules to build a data center can effectively reduce the floor space of the server room and save more than 40% of the utilized space.

iSmart Series Single Cabinet Data Center

iSmart Product Introduction

The iSmart series single cabinet data center integrates UPS, air conditioner, power distribution module, power and environment monitoring system, temperature and humidity detection, light and access control in a standard 19-inch server cabinet. All equipment is pre-installed and pre-commissioned in the factory. The on-site installation is easy and convenient, which can realize rapid deployment, occupy less area, and come with remote web interface monitoring function, which can realize remote operation and maintenance of a site.

Product Features

Safe and reliable

- All components follow domestic and international standardized production standards to ensure product quality.
- Pre-installation, pre-commissioning and other process are controlled at various levels to ensure product installation and operation safe and reliable.
- A single cabinet is a complete system, suitable for various complex scenes (dust, narrow space, no insulation measures, etc.).
- Integrated design, overall delivery, avoid system design problems.
- The door pop-up system can delay the aisle overheating and reserve time for data backup.
- The cabinet integrates an intelligent monitoring system to ensure safe and reliable operation of the computer room.

High efficiency and energy saving

- Proximal refrigeration, high-efficiency power supply, and the overall annual average PUE of single cabinet ≈ 1.30.
- The power distribution, UPS, monitoring, and refrigeration cabinets are integrated to save space.
- Engineering free design, free decoration and wiring, remote operation and maintenance are not on duty, saving TCO.

Easy installation and rapid deployment

- Modular design of power distribution, easy installation and maintenance.
- Rack-mounted air conditioner indoor unit, pipe thread connection, easy maintenance.
- The computer room does not need special decoration treatment, and the equipment is ready to use. Installation and commissioning cycle only need 3 hours.
- A single cabinet is a complete system, plug and play.

Intelligent management

- The monitoring system is extensible and compatible with third-party monitoring systems; friendly HMI.
- Support local and remote WEB interface access, SMS alarm function.

Structure and Composition

Applicable Scene

- Computer rooms of medium and small enterprises, large enterprises, government branch offices.
- Financial business offices, communication business halls and base stations.
- Commercial retail institutions, tourist attractions.
- Gas stations, toll stations, smart buildings.
- Grassroots public security agency, government agency.

Floor area

The overall area of a single cabinet is 0.72㎡, which is suitable for computer rooms within 10-20 ㎡, such as small archives.

System Capacity

Capacity of single cabinet≈3~5kVA

Product Layout Diagram ▼

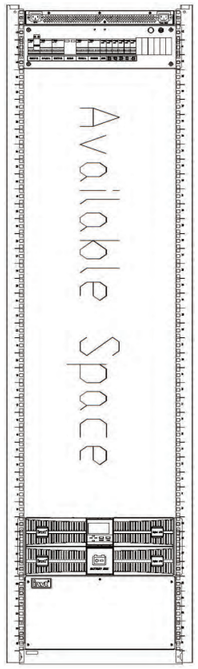

Front View

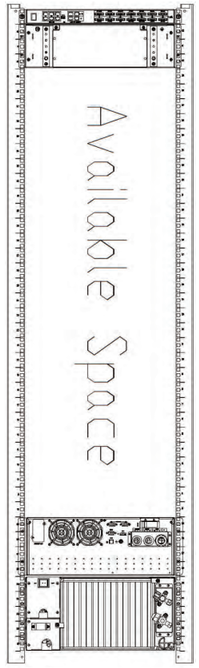

Rear View

Airflow Reference Chart ▼

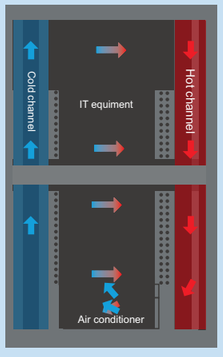

Note: The layout can be adjusted according to the equipment layout.

Application Scenario ▼

Product Configuration ▼

iSmart series single cabinet data center		
System	IT rated power	3-5kW
	Mains	220Vac,50Hz/60Hz
	Ambient temperature	0-45℃
	Ambient humidity	10-95% （Relative humidity）
	IP Class	IP5X
	Altitude	1000m, dereating for >1000m
Cabinet	Dimension（W*D*H)	600*1200*2000mm（Without caster）
	Space occupation	≤32U
	Display	10.1" touch screen LCD
	Lighting	Front and rear LED, front Tri-color LED
	Cable entry	Top and bottom
	Access control system	Fingerprint +IC/ID card + Password
Power Supply and Distribution System	Distribution module	63~80A
	UPS	Rackmounted, 3kVA/6kVA
	Battery	Built-in battery or external battery cabinet
	PDU	2pcs, 16 ports (13*C13+3*C19)
Monitoring System	Supervision system	Intelligent integrated monitoring host
	Single cabinet	Single cabinet control module
	Centralized Monitoring	smoke sensor*1
		Temperature&humidity sensor*1
		Water leakage sensor*1
		Webcam（optional）
		Infrared detector（optional）
		SMS alarm （optional）
Emergency Ventilation	Method	Emergency pop-up door system
Cooling System	Rated cooling capacity	3.7-7.5kW
	Rated air volume	700-1350m³/h
Mechanical	Package dimensions	720*1338*2230mm
	Cabinet color	Black (RAL9004)

Standard Parts and Optional Parts List ▼

Standard Parts	Intelligent Control Screen	Single Cabinet Control Module	Power Distribution Module	PDU*2	Tri-color LED	Lamp
	Outdoor Unit	Indoor Unit	Access Control	Temperature& Humidity Sensor	Water Leakage Sensor	IC Card *1
Optional Parts	UPS	Infrared Detector	Cover Plate	Webcam	SMS Alerter	Audible and Visual Alarm
	Floating Nut	Battery Pack	Battery Cabinet	IC/ID Card	L-Rail	Tray

iWit Series Single Row Cabinet Data Center

iWit Product Introduction

The iWit series single row cabinet data center integrates all needed equipment into cabinet with closed hot and cold aisle, kinds of sensors monitored and managed by power and environment system, which standardize the whole data center to smaller space, comes with remote intelligent controlling, provides safe and reliable operation environment. No need for professional engineer maintenance which simplify construction, operating and maintenance.

Product Features

Safe and reliable

- All components follow domestic and international standardized production standard to ensure product quality.
- Pre-installation, pre-commissioning and other process are controlled at various levels to ensure product installation and operation safe and reliable.
- Integrated design, improving overall system reliability.
- Intelligent pop-up door system ensure the continuous operation of the system effectively.
- Redundant design, integrated intelligent monitoring system, ensure the safe and reliable operation of the computer room.

High efficiency and energy saving

- Array/rack mount refrigeration, precise cooling, greatly improve cooling efficiency, compared with traditional computer room energy saving 25%.
- The system adapts N+X online high-efficiency modular UPS, equipped with intelligent sleep function making system save more energy.
- Remote operation and maintenance, human-free design, saving TCO.
- Closed hot and cold aisles, and effective cooling, realize air inner circulation to reduce operating costs.

Rapid installation

- Engineering free design, suitable for various scenes, install rapidly.
- Modular design of power distribution, hot-swappable ,easy installation and maintenance.
- The system does not need special decoration treatment, the equipment is ready to use. Installation and commissioning cycle only need 4-6 hours.
- A single cabinet is a complete system, which can be easily and quickly expanded to 16 cabinets side by side.

Intelligent management

- Intelligently monitor power supply and environment status.
- Instant and real-time alarm through various ways(SMS, sound and light, e-mail,phone).
- The monitoring system is compatible with many parts(screen, remote APP, local LCD, remote WEB); friendly HMI.
- Provide kinds of interface(ModbusTCP, MQTT, SNMP), easy to system integration.

Applicable Scene

Computer rooms of medium and small enterprises, government branch offices, commercial, medical, education, power, communication and other scenes.

Communication

Commercial

Government

Medical

Education

Power source

Floor area

The overall area of a single cabinet is 0.9㎡, which is suitable for computer rooms within 20-60㎡.

System Capacity

Capacity of single cabinet≈3~7kVA

Structure and Composition

Power Distribution Module

Intelligent Monitoring

Access Control

UPS

Air Conditioner

Webcam

Audible and Visual Alarm

Infrared Detectors

Temperature and Humidity Detectors

PDU

Airflow Reference Chart ▼

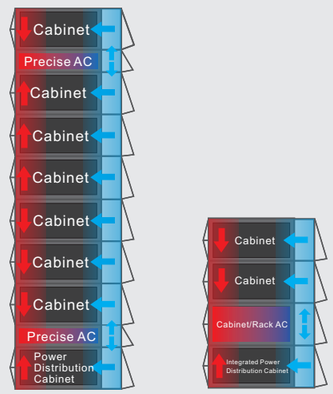

Note: The layout can be adjusted according to the equipment condition

Application Scenario ▼

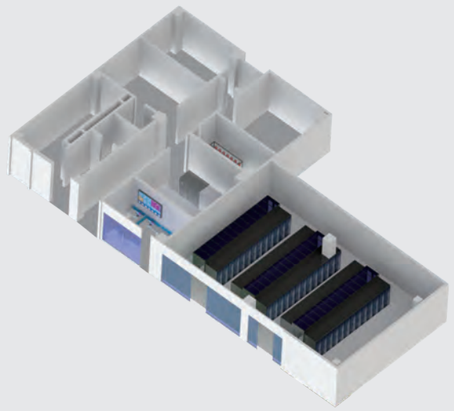

The difference with traditional solution ▼

	iWit series single row data center	Traditional data center
Design	Pre-commissioning in dustry, put into use directly	Different supplier coordinate
Power Distribution	Rack mount, modular, including thunder protection	Isolated design, installation without thunder protection
Installation	Distributed wiring, integrated in dustry, modular	Long construction period, design on site, lack of reliability
Scalability	All components are modular, module number can be adjusted	Lack of expandability
Construction Time	4-6 hours	40 days(including decoration)
Appearance	Unified and harmonious appearance	Hard to unified size/color
Dustproof	Totally enclosed system, IP5X,targeted protection of core equipment	Not avaliable(high cost of dustproof)
Cooling efficiency	Enclosed hot and cold air channel, cooling by the nearest AC, improve cooling efficiency	No isolation of hot and cold air channel, low utilization
Noise	<45dB(A)	>65dB, not suitable for human long-term work
Monitoring System	Local and remote monitoring, human-free	Isolated monitoring equipment, different interface,incompetible
Client interface	Embeded Linux system, long-term operation safe and steady, graphical interface, easy management	Industrial PC, easy to crashing, monitor interface incompetible
Emergency solution	Emergency pop-up door, make good use of room to dissipate heat, maximize the time of emergency operation	Not avaliable
Service	Unified brand and service, full service during the life of product	Different guarantee period service interface and phone number

Parameters ▼

iWit series single row data center (closed hot and cold aisles)			
Overall plan	IT cabinet number		2-15 cabinets
	Mains		220Vac, 50/60Hz, 1Ph+N+PE; 380Vac, 50/60Hz, 3Ph+N+PE
	Ambient Temperature		0-45℃
	IP Class		IP5X
	Altitude		1000m, derated for>1000m
Cabinet	Dimension(W*D*H)		600*1400*2000mm(Without caster)
	Display		10.1 inch touch screen LCD
	Lighting		Front and rear LED, front Tri-color LED
	Cable entry		Top and bottom
	Door Security		Fingerprint+IC/ID card+Password
	Emergency Method		Pop-up door system
Power supply and distribution system	Distribution system	Total input current	63-200A
		Thunder protection	C Level
	UPS	Capacity	10kVA-90kVA
		Input Voltage	220Vac, 50/60Hz, 1Ph+N+PE; 380Vac, 50/60Hz, 3Ph+N+PE
		Operation Mode	1(phase in)/1(phase out), 3/1, 3/3
		Battery	Battery pack/cabinet
	PDU	Normal	2pcs, 16ports(13*C10A + 3*C16)
		Intelligent	Intelligent PDU 24 ports (optional)
Refrigeration system	Power Supply		Mains power supply
	Cooling Capacity		3.7-25kW
	Installation Method		Rack-mount/array can be chosen
	Inlet Outlet Method		Air flow out from ahead and circle to back
	Compressor Type		Variable frequency
Monitoring system	Dynamic Environment Monitoring		Intelligent intergrated monitoring host
			Standard power collection
	Environment Monitoring		Smoke sensor*1, can have an addition
			Temperature&humidity sensor(optional)
			Water leakage sensor*1
			Webcam(optional)
			Infrared detector(optional)
	Other Optional Accessories		SMS alarm(optional)
			Audible and visual alarm(optional)

The above parameters are for reference only, the actual configuration parameters are based on customer needs.

iTalent Series Dual Row Cabinet Data Center

Product Introduction ▼

iTalent series dual row cabinet data center adopts modular design, integrating power supply and distribution system, air conditioning system, cabinet system, closed aisle system, monitoring system and cabling system into one, and configuring various environmental data sampling sensors for unified monitoring and management by eSite cloud map monitoring system, realizing automatic control and intelligent operation and maintenance, enhancing data center reliability, availability and maintainability.

Product Features ▼

Safe and reliable

- All components are manufactured according to international and domestic standards to ensure product quality;
- Data center productization, productization reliability up to 99.999%. Adopt integrated design to enhance the overall reliability of the system;
- Redundant design of key components to improve system reliability;
- The data center power distribution and cooling system is designed according to the international class A server room (international standard Tier Iv level);
- Integrated intelligent monitoring system, early warning of key data to ensure the safety of server room operations reliable.

High efficiency and energy saving

- The average annual PUE can be reduced to 1.30;
- The use of in-row air conditioner cooling, closed cooling space to achieve precise cooling near the server side, greatly improving the efficiency of cooling, comparing with the traditional server room can save energy by more than 35%;
- N+X high efficiency online modular UPS with intelligent sleep function to save more energy;
- High density deployment, single cabinet up to 10kW;
- Integrated power supply and distribution, space saving, 1-2 more equipment cabinets can be deployed;
- Remote O&M is unattended, saving TCO.

Easy installation

- Standardized components, modular architecture, and rapid on-demand deployment to match your business;
- No need for professional machine room, can be installed directly on the concrete floor of the building, reducing the supporting engineering;
- The products are standardized, modular, plug-and-play, and easy to be installed, greatly reducing the installation cycle.

Intelligent management

- Intelligent monitoring of the working status of power and environmental systems;
- Intelligent lintel, visual display of key information, easy operation and maintenance;
- Real-time alerts can be made in time by SMS, telephone, email, sound and light, etc;
- Provide a variety of human-machine interaction methods such as operation and maintenance large screen, remote APP, local LCD and remote WEB;
- Provide a variety of northbound interfaces such as ModbusTCP, MQTT, etc. for easy system integration.

Parameters ▼

iTalent series dual row cabinet data center			
			Parameters
System	Size(W*D*H)		3600*L*2600mm (L≤15000mm)
	IT rated power/cabinet		3~10kW
	Door Specifications		Automatic sliding doors/manual sliding doors/pull-out doors
	Intelligent Lighting		LED white light, intelligent color ambient light, linkage with monitoring system.
	Access Control System		Support face/fingerprint/password/IC and other methods can be selected
	Ambient temperature		0-45℃
	Ambient Humidity		10-95%, Relative Humidity
	Protection class		IP20
	Altitude		1000 m, more than 1000 m need to be derated.
	Installation method		Direct concrete floor installation / Raised floor installation
Cabinet	Size(W*D*H)		600/800*1200*2000mm
	Available Space		42U
	Inlet method		Support up/down wire feed
Power Distribution System	Power Distribution Cabinet	Input method	Single circuit MCCB/Dual circuit ATS
		Grid system	380/400/415Vac, 50/60Hz
		Specification	63~400A
		SPD	B/C class optional
		Type	Integrated UPS distribution cabinet/precision distribution cabinet/intelligent busbar
	UPS	Capacity	Built-in maximum 200kVA, external 200kVA or more
		Input Freq.	40-70Hz
		Output PF	1
		Battery	Built-in cabinet type battery cabinet or external battery cabinet
	PDU	Ordinary Type	[National standard 12-bit 10A + 3-bit 16A]*2
		Smart Type	24-port intelligent PDU (optional)
Cooling System	Air Conditioner Capacity		12.5~60kW
	Cooling method		Air-cooled
	Refrigerant		R410A
Monitoring System	HMI		21.5 inch touch screen
	System Functions		Remote WEB/Centralized monitoring of power, environment, video, access control system/Northbound interface
	Monitoring accessories		Smoke sensor/T&H sensor/water flood sensor/infrared sensor/webcam/access control/fire linkage
	Alarm method		E-mail / SMS, Audible and visual alarm, Telephone Voice, APP(optional)

The above parameters are for reference, the actual configuration parameters are subject to customer requirements.

Applicable Scene ▼

Large-scale data center, campus data center and other core business server room, suitable for Government, medical, education, finance, telecom and other leasing and self-use businesses.

Applicable power ▼

The maximum supported power of a single cabinet is 10kW per cabinet. And it supports up to 50 cabinet which includes air conditioner and power distribution cabinet.

Diversified configurations ▼

Professional VERSION

Standard VERSION

Air flow organization reference chart ▼

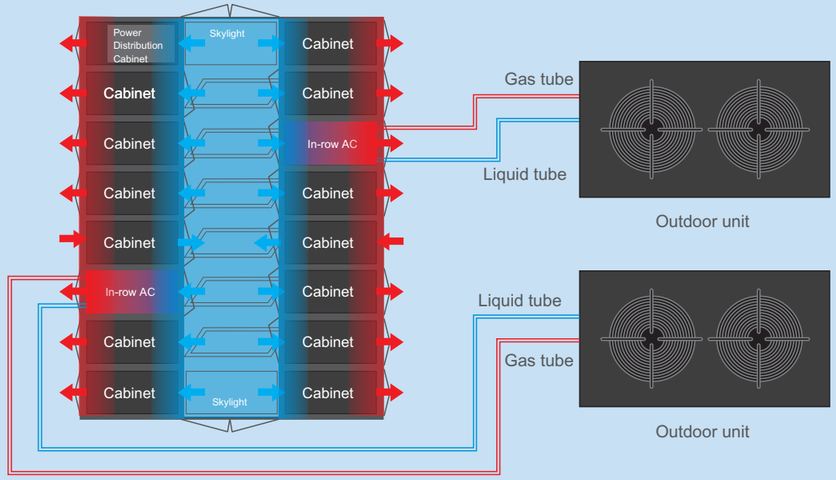

When the outdoor unit is higher than the indoor unit: the vertical height difference between indoor and outdoor units should not exceed 20m; when the indoor unit is higher than the outdoor unit: the vertical height difference between indoor and outdoor units should not exceed 5m.
The equivalent length of one way pipeline should not exceed 30m, please contact with professional engineers for more information!

Integrated Data Center Application Scenario Diagram ▼

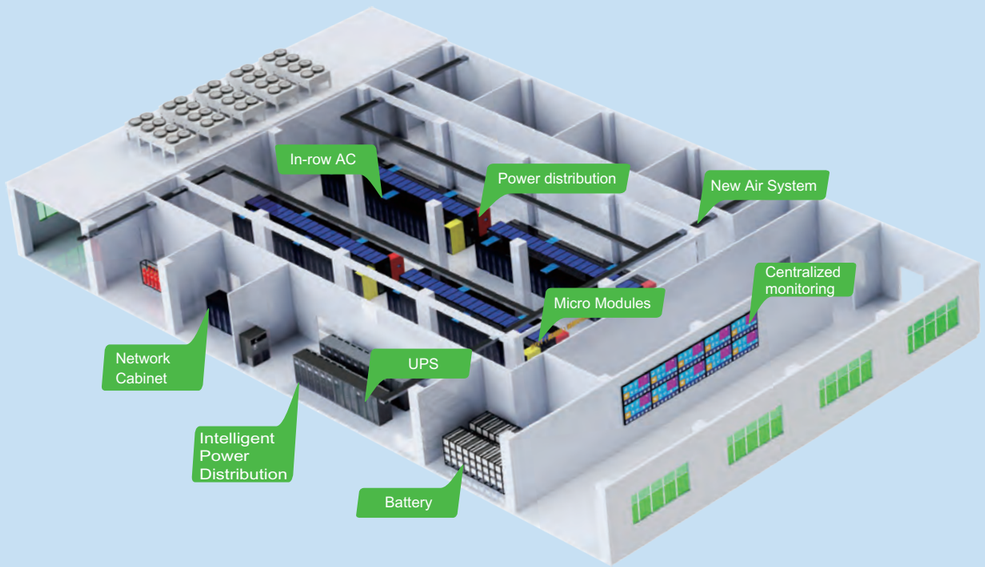

iLegend Series Container Data Center

Product Introduction ▼

iLegend series container data center adopts all-in-one design and factory prefabricated installation, integrating power supply and distribution system, air conditioner system, cabinet system, closed aisle system, monitoring system and fire protection system in a container, forming a unit that can operate independently and be monitored and managed by eSite monitoring system, meeting the outdoor data center construction needs of rapid deployment and agile delivery.

Product Features ▼

Safe and reliable

- All components follow domestic and international standardized production standard to ensure product quality.
- Ip55 protection, with excellent waterproof performance, suitable for a variety of complex scenes.
- Redundant design of key components to improve system reliability.
- Integrated video, access control and intelligent monitoring management system to ensure safe and reliable equipment operation.

High efficiency and energy saving

- All-in-one design, hot and cold aisle isolation, fully enclosed design, improve the efficiency of cooling capacity and save energy.
- Adopt full inverter precision air conditioner, output cooling capacity on demand, precise cooling and save more energy.
- Adopt energy-efficient modular UPS with intelligent sleeping function, more energy-saving.
- Integrated design of power distribution cabinet and UPS, saving space.

Rapid installation

- Power supply and distribution, air conditioner, cabinets system, closed access, monitoring system and fire protection system are factory prefabricated and pre-installed, plug-and-play.
- Standard container, in line with domestic and international sea and land transportation conditions, worldwide reachable.
- No need for professional server room, can be installed directly on the concrete floor of the building or outdoor, simple and fast.

Intelligent management

- Intelligently monitor the working status of power and environmental system.
- Real-time alerts can be made in time via SMS, telephone voice, email, sound and light.
- Provide a variety of human-machine interaction methods such as O&M screen, remote APP, local LCD and Web.
- Provide ModbusTCP, MQTT and other northbound interfaces to facilitate system integration.

Applicable Scene ▼

It is especially suitable for data centers in special industries such as sports venue construction, military camp deployment, oil exploration, marine scientific research, disaster preparedness, and emergency communications, as well as data centers restricted by space, geographical environment, and environmental protection.

Sports events

Oil exploration

Marine scientific research

Emergency communications

Applicable power ▼

Capacity of single cabinet≈9kW

Product Layout Diagram ▼

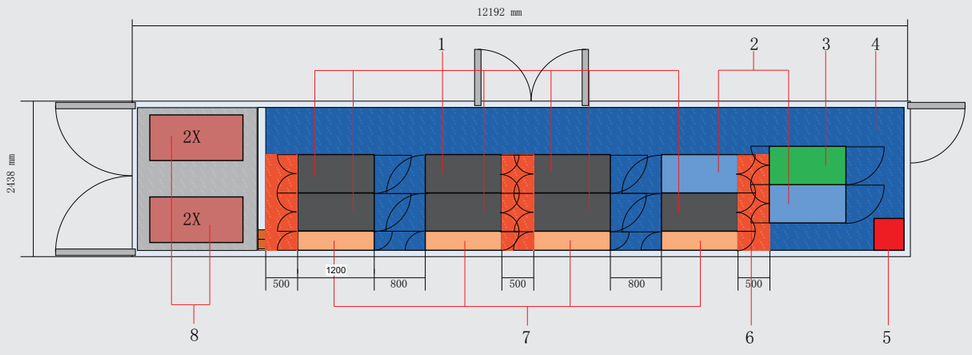

① IT rack cabinet ② Battery cabinet ③ Power distribution cabinet ④ Cold aisle

⑤ Fire extinguisher ⑥ Hot aisle ⑦ In-row air conditioner ⑧ Outdoor unit

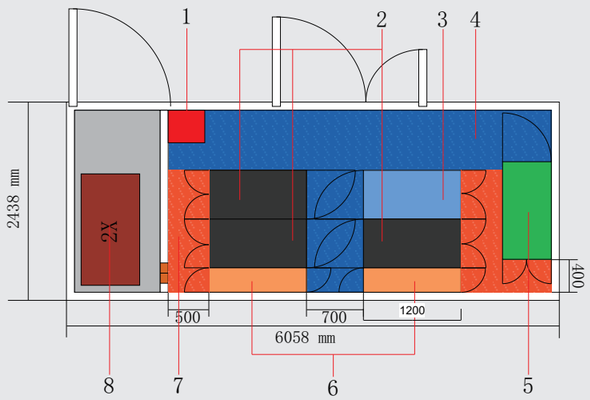

① Fire extinguisher ② IT rack cabinet ③ Battery cabinet ④ Cold aisle

⑤ Power distribution cabinet ⑥ In-row air conditioner ⑦ Hot aisle ⑧ Outdoor unit

Product Demo ▼

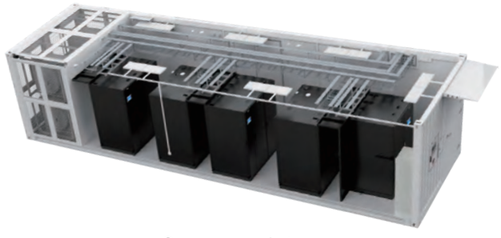

China market

Overseas markets

Parameters ▼

iLegend Container Data Center Product Specification			
		40ft layout All-In-One solution	20ft layout All-In-One solution
Cabinet System	Size of IT cabinet (W×D×H) mm	600×1200×2000	600×1200×2000
	Num. of IT cabinet (pcs)	8	3
	Power of each cabinet (kW)	6/9 (High density)	6/9 (High density)
	Total power (kW)	48/72 (High density)	18/27 (High density)
Power and Distribution System	Power supply system	250A Dual input/ATS optional; 380/400/415V, 50/60Hz, 3Ph+N+PE; input lightning protection 8/20us, In=20kA, Imax=40kA	125A Dual input/ATS optional; 380/400/415V, 50/60Hz, 3Ph+N+PE; input lightning protection 8/20us, In=20kA, Imax=40kA
	UPS	Modular Online UPS 90~150kVA	Modular Online UPS 40~90kVA
	Battery back-up time	In-row battery cabinet, the number of battery and capacity can be selected according to project requirements	
	PDU	16 port IEC PDU (C13*12+C19*4) ,32A	
Cooling System	Cooling method	Default installation of 25kW air-cooled inverter in-row air conditioner (300mm wide)	
Monitoring System	Power and environment system	Monitoring host can realize the centralized monitoring of integrated power distribution cabinet, UPS, air conditioning, access control, video, fire, etc., and support sound and light, telephone, WeChat, SMS, e-mail multiple alarm methods	
	Access control	Support IC card + password + fingerprint three-in-one access control system, optional face recognition	
	Local Display	Support 10.1 inch touch screen, support local touch screen, client, remote Web, mobile app and other display methods	
Fire Prevention System	Fire extinguishing system	Automatic flooding fire extinguishing system, cold/hot aisles are equipped with smoke and temperature sensor, automatic control of fire gas release , support for sound and light, gas release indicator and other warning methods, support for manual emergency opening of the fire extinguishing system (optional Pipe fire extinguishers)	
	Fire extinguishing gas	FM200/HFC-227ea (Novec 1230 optional)	
Container Structure	Container size (H×W×L) mm	40ft:2896×2438×12192	20ft:2896×2438×6058
	Weight of container (T)	8	4
	Container load-bearing (T)	15	7
	Container protection	Waterproof, dustproof, anti-mold, protection grade:IP55	
Operation Environment	Ambient temperature (℃)	-40~50 (-20 ℃ below require optional low temperature components and water pipes need to do insulation treatment)	
	Altitude (m)	More than 1000m need to be derated	

eSite Monitoring System

Product Introduction

The eSite monitoring system adopts the centralized monitoring of IoT, the composition of the local power and environment monitoring host and the expanded control module, providing a set of the computer room monitoring system with complete functions, flexible deployment and high reliability.

- Support the intelligent detection of all equipment such as UPS, air conditioner, power distribution, environmental detection, security, fire protection, etc.;
- Support multiple monitoring methods such as local LCD, local web, cloud web, mobile APP, etc.;
- Support multiple alarm methods such as telephone, SMS, email, audible and visual alarm;
- Support multiple northbound interfaces such as MQTT, ModbusTCP, SNMP, etc.;

Monitoring Interface

Performance Characteristics

- Complete history record, with event processing record function, and download and export
- Standardized connection makes implementation easier and faster.
- Modular design,easy to install and maintain.
- LCD monitor
  Mainframe visual management
- WEB access setting, no need for B/S structure software Installation
- Diversified warning methods, such as SMS, mail files, sound and light.
- Built-in large-capacity SD card can store long time history events and data records.

Monitoring Network Diagram

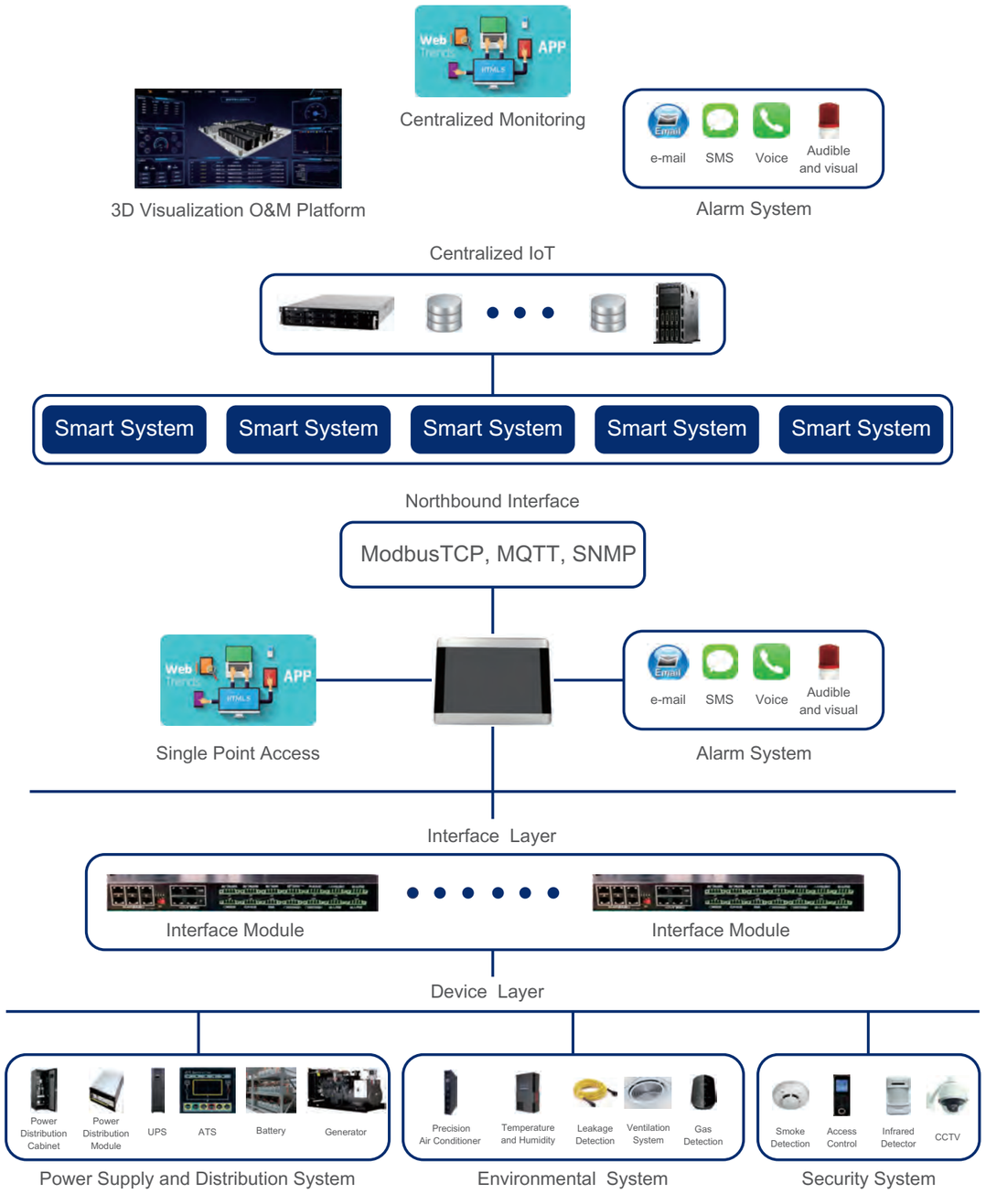

VCS Series Rack Air Conditioner

The VCS series rack air conditioner is a special air conditioner for circulating cooling the internal, air flow of the cabinet, it provides stable and reliable temperature and humidity regulation services, for micro-data centers, and improves the stability and reliability of all kinds of equipment in micro-data.

3.7kW Integrated Type (Fixed frequency)

3.7kW Integrated Type (Variable frequency)

3.7kW Split Type (Variable frequency)

7.5kW Split Type (Variable frequency)

12.5kW Split Type (Variable frequency)

Applicable

Modular data center

High heat density data machine room

Container data center

Small and medium-sized data center

Operation Principle

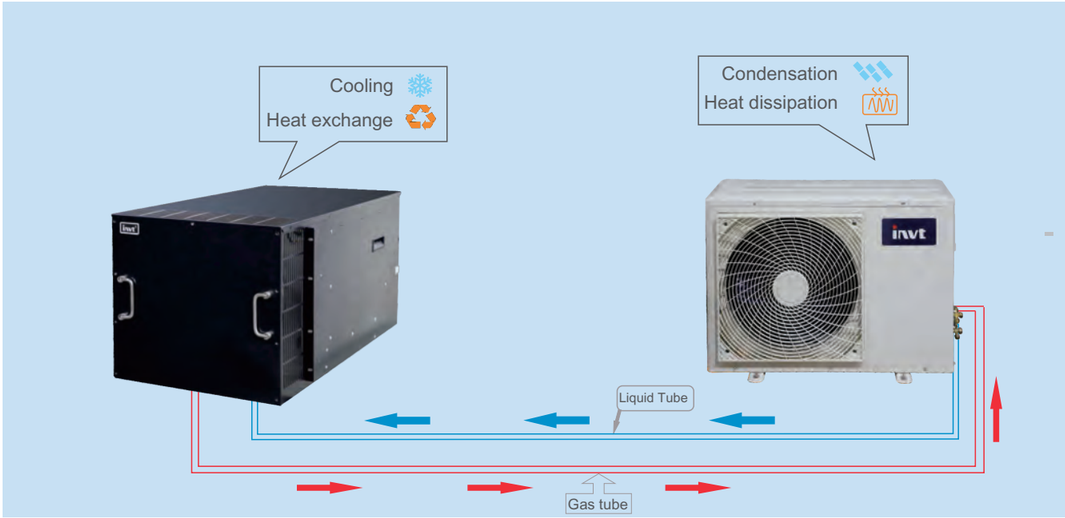

Product Feature

Safe and reliability

- Mainstream brands are used for key components, making operation more stable and reliable.
- Using R410A green refrigerant, in line with international green refrigerant requirements.
- Standard with RS485 interface, support remote centralized control, call self-starting, timed power on and off.
- Advanced microprocessor controller with multi-level password protection to prevent misusing.

High efficiency and energy saving

- Standard EC fan, lower noise, better airflow organization, accurate automatic control of airflow output.
- High-efficiency DC inverter compressor, real-time adaptation to changes in heat load in the cabinet, infinitely adjust refrigeration capacity.
- Equipped with electronic expansion valve to quickly and precisely adjust the system refrigerant flow, saving 30% energy comparing with traditional expansion valve.
- Adopt large area "V" shape evaporator design, make heat exchange faster and more efficient.

Diversified configuration

- Cover multiple cooling range segments, suitable for different power cabinet applications.
- Standard configuration of the upflow supply and horizontal airflow supply, optional front air supply form.
- A wide variety of options.

High adaptability

- Rack-mounted pull-out design for easy handling and maintenance.
- Support single cabinet and multi-cabinet cooling applications, support cabinet online expansion, business without interruption.
- Compact structure, effectively reducing the occupation of valuable U space in the cabinet.
- Working power supply supports 50/60Hz voltage frequency, more flexible configuration.
- Standard models are suitable for outdoor ambient temperature -20~45℃, and optional low temperature components are available to meet outdoor temperature as low as -40℃.

Application Scenario ▼

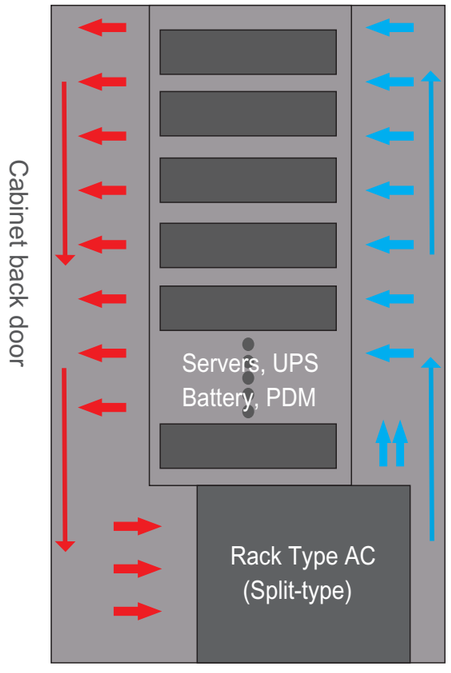

Scenario 1
Side view of single cabinet

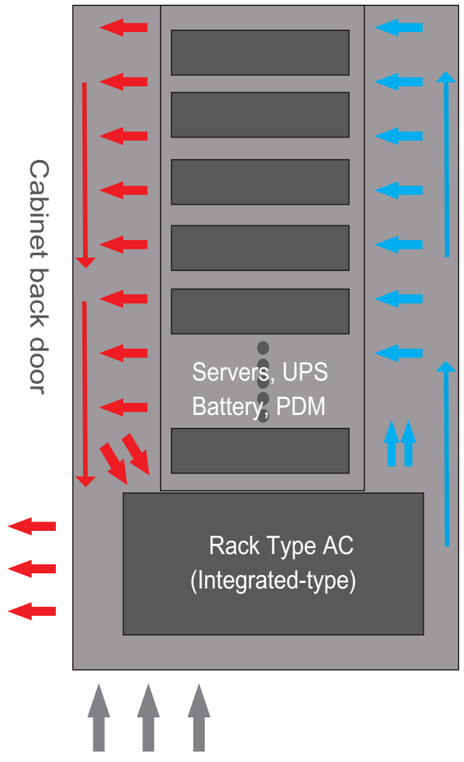

Scenario 2
Side view of single cabinet

Specification ▼

Indoor unit

	Unit	VCS003/VCP005		VCS007/VCP010		VCS012/VCP018		VCS003UH	VCS003UH
Unit configuration	-	Constant Temp	Constant Temp&Hum	Constant Temp	Constant Temp&Hum	Constant Temp	Constant Temp&Hum	Constant Temp	Constant Temp
Total cooling capacity	kW	3.7	3.7	7.5	7.5	12.5	12.5	3.7	3.7
Sensible cooling capacity	kW	3.7	3.7	7.5	7.5	12.5	12.5	3.7	3.7
Ton(USA)		1.05		2.13		3.55		3.55	3.55
Air volume	m^3/h	700	700	1350	1350	2300	2300	700	700
Sensible heat ratio	%	100	100	100	100	100	100	100	100
Heating capacity	kW	1	1	2	2	3	3	1	1
Humidification capacity	kg/h	-	0.5	-	0.5	-	0.5	-	-
Compressor type	/	DC Frequency Conversion						Variable Frequency	Fixed Frequency
Voltage	V	220	220	220	220	220	220	220	220
Frequency	Hz	50/60	50/60	50/60	50/60	50/60	50/60	50/60	50/60
Phase	P	1	1	1	1	1	1	1	1
Full load current	A	13.5	13.6	27.1	27.5	30.1	30.5	13.5	13.5
Unit width	kg	26	27	35	36	47	49	9U	58
Unit width	mm	440	440	440	440	440	440	440	440
Unit depth	mm	800	800	800	800	800	800	980	980
Unit height	mm	219(5U)	219(5U)	310(7U)	310(7U)	440(10U)	440(10U)	400(9U)	350(8U)

Outdoor unit

VCP***	Unit	5	10	18	-
Air volume	m3/h	2800	3500	5000	-
Voltage	V	220	220	220	-
frequency	Hz	50/60	50/60	50/60	-
Phase	P	1	1	1	-
Unit width	mm	886	882	995	-
Unit depth	mm	340	380	440	-
Unit height	mm	605	720	1256	-

Test condition: The indoor dry-bulb temperature is 37°, and the relative humidity is 24%.
Working temperature: -20~45℃, less than -20℃ need to add low temperature components.

VCR Series In-row air conditioner
(12.5kW-60kW)

In-row air conditioner

VcolRow series in-row air conditioner is kind of intelligent temperature control product especially suitable for modular data center. It is usually deployed in the cabinet arrangement, installed side by side with the server cabinet, combined with enclosed hot and cold aisle, close to the heat source and efficient cooling, creating an ideal operating environment for the key infrastructure of the data center.

Product Features

High reliability

- Adopting variable frequency scroll compressor , excellent resistance to liquid impact and lower noise.
- Highly reliable full frequency conversion control, starting current less than rated current and lower impact of power grid.
- Adopting two stage evaporator, add water tray in the middle, effectively prevent blowing water.
- Intelligent detection of supply voltage, frequency and three-phase imbalance.
- Adopting high-quality components that are strictly tested and certified.
- High strength structure design could ensure solidification and reliability.

High efficiency and energy saving

- Accurate control of temperature and humidity.
- Adopting variable frequency scroll compressor that has 20%~100% dynamic adjustment of cooling capacity output.
- Adopting EC Backward Centrifugal Fan, adjusts the speed output according to the real-time thermal load change.
- Adopting electronic expansion valve that has fast response speed and precise flow adjustment.
- Full frequency conversion design, intelligent control cooling capacity and air volume output on demand to achieve efficient operation.
- High return air temperature design improves cooling efficiency.

Diversified configuration

- High refrigeration density, the max refrigeration capacity of the full cabinet is 60kW, max cooling capacity of half cabinet is 35kW.
- Standard electrode humidifier, support optional wet film humidifier.
- Optional delivery style grid to meet left and right air delivery needs.
- Optional fluorine pump natural cooling module to make full use of free natural cooling source.
- Optional dual power input.

Intelligent management

- Using 7-inch color capacitive touch screen.
- Support graphic status and temperature and humidity curve display.
- Support 64 units for CAN communication networking.
- 10 temperature sensors can be connected.
- Standard Rs485 interface, support optional SNMP interface.
- Three-level password protection, hierarchical authorization management.
- Multiple intelligent control modes.

Specification

	Unit	VCR012	VCR025	VCR030	VCR040	VCR050	VCR060
Unit Configuration	-	*	Refrigeration type / Constant temperature&humidity type				
Total cooling capacity	kW	12.5	25.5	30.8	42.8	51.5	62.7
Sensible cooling capacity	kW	12.5	25.5	30.8	42.8	51.5	62.7
Ton(USA)		3.55	7.25	8.76	12.17	14.64	17.83
Air volume	m³/h	2800	5000	5200	8500	10500	11500
Heating capacity	kW	3	4.5	4.5	6	6.5	6.5
Humidifying capacity	kg/h	1.5	3	3	3	3	3
EER	/	3.38	3.07	3.18	3.3	3.56	3.18
Pow er supply	/	380V 50/60Hz	380V 50/60Hz	380V 50/60Hz	380V 50/60Hz	380V 50/60Hz	380V 50/60Hz
Width	mm	300	300	300	600	600	600
Depth	mm	1100/1200	1100/1200	1100/1200	1100/1200	1100/1200	1100/1200
Height	mm	2000	2000	2000	2000	2000	2000
Weight	kg	200/210	220/230	230/240	300/310	330/340	335/345
Outdoor unit	Unit	VCP018	VCP038	VCP045	VCP056	VCP076	VCP088
Air volume	m³/h	5000	12000	15000	15000	22000	28000
Fan Num.	pcs	2	1	1	1	2	2
Size(W*H*D)	mm	832*1220*310	982*740*1378	1275*750*1578	1275*750*1778	1275*740*2178	1275*750*2378
Weight	kg	64	136	138	152	178	188

Working temperature: -20~45℃, less than -20℃ need to add low temperature components.
* ：VCR012 has constant temperature type/constant temperature & humidity type.
Test condition: The indoor dry-bulb temperature is 37°, and the relative humidity is 24%.

Applicable Scene

Modular data center

Container data center

High heat density data machine room

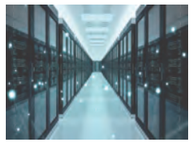
Small and medium-sized data center

VCR Series In-row air conditioner

Evaporator ▼

Adopt two-stage evaporator, can increase the refrigeration area, and increase the water tray in the middle, can effectively prevent blowing water.

Scroll compressor ▼

Adopt variable frequency scroll compressor that has 20%~100% dynamic adjustment of cooling capacity output. It has superior resistance to liquid impact and low noise and vibration level, and has long life.

EC Fan ▼

High efficiency EC centrifugal fan with low energy consumption, high cooling efficiency, less maintenance, and it can adjust the speed output according to the real time heat load changes to achieve maximum savings in operating energy consumption, more than 40% less than ordinary fans.

Electronic expansion valve ▼

The use of electronic expansion valve, has fast response speed, which can quickly stabilize the working conditions, as well as accurate control of refrigerant flow with variable frequency compressor to achieve energy saving.

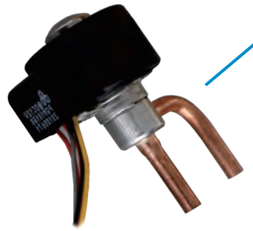

VCA Series Small Room Air Conditioner

VCA series small room precision air conditioner of INVT is a special precision air conditioner for small and medium-sized server rooms, power distribution rooms, battery rooms, communication base stations and other places, providing indoor environment temperature and humidity and cleanliness control.

Product Features ▼

Energy Efficient

- Large air volume, small enthalpy difference and high sensible heat ratio design, meet the temperature control needs of the server room.
- High energy-efficient compressor with electronic expansion valve as standard for fast response and more accurate flow adjustment.
- High efficiency backward tilting centrifugal fan with low energy consumption and high air volume to ensure uniform temperature and humidity distribution in the server room.
- The use of high-efficiency internally threaded copper tubes and hydrophilic layer-plated open-window aluminum fin evaporators for higher heat transfer efficiency.
- Outdoor fan with infinitely adjustable speed control, matching condensing pressure operation, energy saving and noise reduction.
- Standard with electrode humidifier, higher humidification efficiency and wider application range.

Safe and reliable

- Using of rigorously certified and high-quality devices to enhance reliability.
- Products are subjected to rigorous and repeated testing and verification, with high standards required for high quality delivery.
- 365 x 24 hours non-stop operation, long life design and low maintenance costs.
- Ultra-wide grid adaptability to avoid frequent start/stop of air conditioners.
- Highly efficient and environmentally friendly refrigerant R410A as standard.
- Threaded quick coupling design for no welding on site.

Intelligent control

- 4.3-inch true color touch screen, multi-level password authority, system self-test diagnostic function, more intelligent;
- Comprehensive monitoring and display of power supply voltage, frequency, phase sequence, cooling capacity, air volume, temperature and humidity curve and other key information, real-time control of the normal state of the system;
- Up to 64 air conditioners can be rotated patrol group control to achieve scheduled rotation, fault rotation, cascading, demand synchronization, anti-competitive operation, etc;
- Support power-on self-start and timer on/off functions, easy to manage air conditioners;
- Local storage of not less than 1000 history records, easy to view and trace;
- Standard RS485 interface, support optional SNMP interface.

Customizable

- Standard with electrode humidifier, support optional wet film humidifier;
- 100% full frontal maintenance and more flexible installation;
- Support optional upper pipe / upper drainage to meet the needs of different scenarios;
- Support AC/EC fans optional according to actual needs;
- Optional dual power input;
- A variety of air supply methods to meet a variety of applications;
- Optional phase tolerance function to better protect the power of air conditioners.

Technical parameters ▼

Fixed frequency small room air conditioner

	Unit	VCA005	VCA007	VCA012	VCA017	VCA020
Configuration	—	Refrigeration type / Constant Temp&Humidity type				
Total cooling capacity	kW	5.5	7.5	12.5	17	20.5
Sensible heat ratio	W/W	0.9	0.9	0.9	0.9	0.9
Ton(USA)		1.56	2.13	3.55	4.83	5.83
Refrigerant Type	—	R410A				
Expansion valve Type	—	Electronic expansion valve				
Air volume	m3/h	2000	2300	3200	5000	5500
Heating capacity	kW	3	3	3	6	6
Humidification capacity	kg/h	3	3	3	3	3
Width	mm	520	520	600	700	700
Depth	mm	420	420	520	700	700
Height	mm	1750	1750	1800	1900	1900
Grid type	-	220V/50Hz		380V/50Hz		
Refrigeration type full load current	A	10.5	14.9	10.8	14.3	14.6
Constant Temp&Hum type full load current	A	22.91	25.16	21.94	25.6	26
Weight	kg	62	65	100	120	130
Outdoor unit						
Model	-	VCP007SF	VCP010SF	VCP018SF	VCP024SF	VCP028SF
Air volume	m3/h	2800	3500	5000	7000	7000
Grid type	-	220V/50Hz				
Width	mm	840	830	832	1050	1050
Depth	mm	285	311	330	400	400
Height	mm	606	720	1246	1560	1560
Weight	kg	33	37	55	95	95

Remarks:

1.The above performance parameters are based on, indoor return air 24℃, relative humidity 50%, outdoor temperature 35℃

2.The small room precision air conditioner is divided into two different air supply methods: top front air supply and downflow air supply

3.Small room precision air conditioner under the fan type is divided into two forms of fan sinking and not sinking

4. Working temperature: -20~45℃, less than -20℃ need to add low temperature components.

Variable frequency small room air conditioner

	Unit	VCA005	VCA007	VCA012	VCA017	VCA020	VCA026	VCA032
Configuration	—	Refrigeration type / Constant Temp&Humidity type						
Total cooling capacity	kW	5.5	7.5	12.5	17	20.5	26	32
Sensible heat ratio	W/W	0.9	0.9	0.9	0.9	0.9	0.9	0.9
Ton(USA)		1.56	2.13	3.55	4.83	5.83	7.38	9.09
Refrigerant Type	—	R410A						
Expansion valve Type	—	Electronic expansion valve						
Air volume	m3/h	2000	2300	3200	5000	5500	7500	9000
Heating capacity	kW	3	3	3	6	6	6	6
Humidification capacity	kg/h	3	3	3	3	3	3	3
Width	mm	520	520	600	700	700	900	900
Depth	mm	420	420	520	700	700	800	800
Height	mm	1750	1750	1800	1900	1900	1975	1975
Grid type	-	220V/50Hz		380V/50Hz				
Constant Temp&Hum type full load current	A	27	30	25	29	32	34	38
Weight	kg	67	70	105	125	135	165	165
Outdoor unit								
Model	-	VCP007SF	VCP010SF	VCP018SF	VCP024SF	VCP028SF	VCP035SF	VCP040SF
Air volume	m3/h	2800	3500	5000	7000	7000	11000	11000
Grid type	-	220V/50Hz						
Width	mm	840	830	832	1050	1050	1150	1150
Depth	mm	285	311	330	400	400	490	490
Height	mm	606	720	1246	1560	1560	1722	1722
Weight	kg	33	37	55	95	95	115	115

Remarks:

1.The above performance parameters are based on, indoor return air 24℃, relative humidity 50%, outdoor temperature 35℃

2.The small room precision air conditioner is divided into two different air supply methods: top front air supply and downflow air supply

3.Small room precision air conditioner under the fan type is divided into two forms of fan sinking and not sinking

VCA Series Large Room Air Conditioner

Product Introduction

VCA series large room precision air conditioner is a special precision air conditioner for medium and large IDC rooms, communication rooms, equipment rooms and other places to provide internal environmental temperature and humidity and cleanliness control. It is used to ensure that cabinet equipment, server equipment, etc. have a reasonable temperature and humidity operating environment.

Product Features

High efficiency and energy saving

- Adopt the design of large air volume, small enthalpy difference and high sensible heat ratio.
- V or A shape evaporator, high heat exchange efficiency.
- High-precision electronic expansion valve, precise regulation of refrigerant flow.
- EC fan with real-time adjustment of airflow output according to the demand.
- Inverter outdoor fan, adjust speed according to change of system pressure, operating efficiently.
- Use R410A green refrigerant, in line with international green refrigerant requirements.
- Hermetic scroll compressor for higher efficiency and more stable operation.

Safe and reliable

- The main components adopt international famous brands
  - LS circuit breaker
  - Schneider contactors
  - Standard G4 filter
  - INVT controller & VFD
  - standard oil separator
- Real time monitoring of input voltage and frequency
- Intelligent monitoring of air conditioner power supply voltage, frequency and three-phase unbalance
- Double electric control box design, strong and weak electrical isolation to avoid signal disturbance
- Fan & drive integration of indoor unit
- Separate outdoor unit's switch & VFD

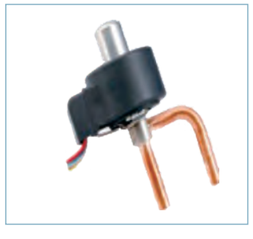

Intelligent management

- Standard 10-inch color capacitive touch screen.
- Standard RS485 interface and SNMP interface.
- Support temperature and humidity curve display and graphic status display.
- More than 2000 historical alarm information storage.
- Use CAN communication to do network group control.

Customizable

- Optional water leakage detector, front-up flow kit.
- Optional built-in low-temperature component.
- Support upflow supply, top front supply and downflow supply, which can be flexibly selected according to the actual application requirements.

Operation Principle

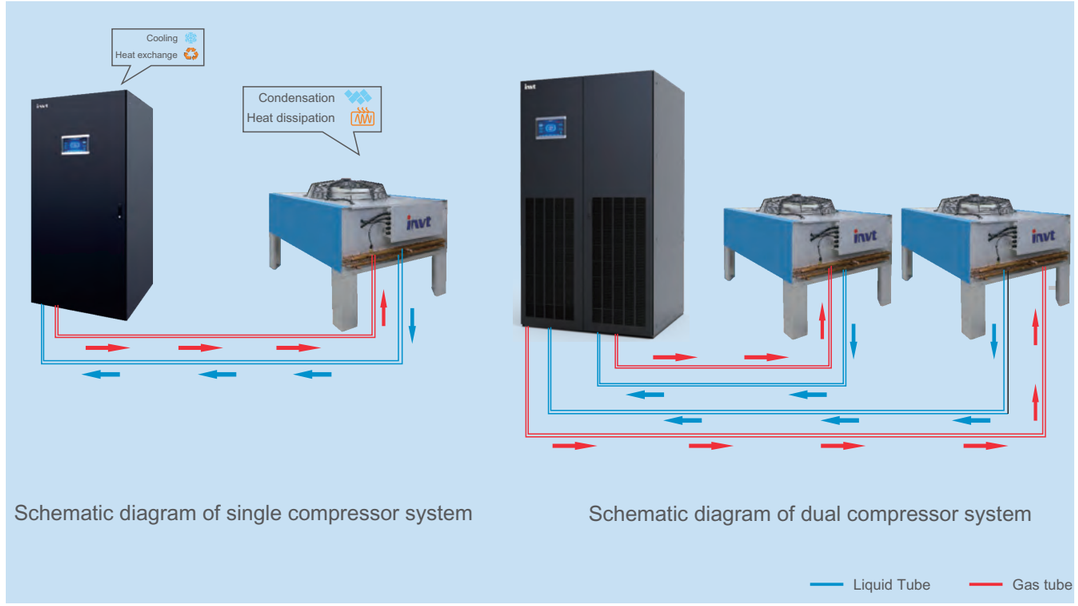

Applicable Scene

Large-scale server room

Traditional Server Room

Large-scale data centers

High heat density data center

Technical parameters ▼

Model	VCA025	VCA030	VCA035	VCA040	VCA045	VCA050	VCA060
Configuration	Constant Temp&Humidity						
Total cooling capacity (kW)	27	30.5	36.2	41.1	45.3	51.1	60
Sensible cooling capacity(kW)	24.8	27.5	33.3	38	41.1	47	54
Ton(USA)	7.82	8.71	10.8	11.37	12.97	14.22	17.14
Air volume (m³/h)	8500	9500	11000	12000	12500	13000	14000
Heating capacity (kW)	6	6	6	9	9	9	9
Humidification capacity (kg/h)	5	5	5	10	10	10	10
EER(W/W)	2.95	2.79	2.83	2.8	2.73	2.82	2.65
AEER (W/W)	4	4	4	4	4	4	4
Compressor type	GMCC rotor/ Hitachi Scroll	GMCC rotor/ Hitachi Scroll	Hitachi Scroll	Hitachi Scroll	Hitachi Scroll	Hitachi Scroll	Hitachi Scroll
Fan type	EC Fan						
Refrigerant	R410A						
Power supply	380V/50Hz 3P						
Full-load current(A)	36.5	40.8	41.6	45.7	50	54.5	64.6
Width (mm)	900	900	900	900	900	1100	1100
Depth (mm)	995	995	995	995	995	995	995
Height (mm)	1975	1975	1975	1975	1975	1975	1975
Weight(kg)	320	325	350	370	450	470	470

NOTE:

1. Test conditions: indoor return air temperature 24℃, relative humidity 50%, outdoor temperature 35℃.
2. AEER test conditions: indoor return air temperature and humidity: 24℃/50%RH, outdoor temperature 35℃/25℃/15℃/5℃/ -5℃ respectively.
3. The upflow supply fan set supports two different air outlet methods: vertical top air supply (with on-site air duct) and top front supply.
4. Top front supply mode, can add front up flow kit on site (height increase) or standard height top front supply (factory prefabricated).
5. In order to save fan consumption, efficient cooling, downflow supply air conditioner standard products for the fan sink type, electrostatic floor height recommended ≥ 450mm.
6. In case of special circumstances at the site, the downflow supply air conditioner can support the customization of the optional fan unsinking, or other ways of air supply and return, etc.
7. Working temperature: -20~45℃, less than -20℃ need to add low temperature components.

Technical parameters ▼

Model	VCA060 (Dual Sys.)	VCA070 (Dual Sys.)	VCA080 (Dual Sys.)	VCA090 (Dual Sys.)	VCA100 (Dual Sys.)	VCA110 (Dual Sys.)	VCA120 (Dual Sys.)
Configuration	Constant Temp&Humidity						
Total cooling capacity (kW)	61	72.4	82.2	90.6	102.2	110.3	120
Sensible cooling capacity(kW)	55	66.6	76	82.2	94	100.3	108
Ton(USA)	17.4	21.61	22.75	25.93	28.5	31.51	34.28
Air volume (m³/h)	19000	22000	24000	25000	26000	27000	28000
Heating capacity (kW)	9	9	12	12	12	12	12
Humidification capacity (kg/h)	10	10	10	10	10	10	10
EER (W/W)	2.79	2.83	2.8	2.73	2.82	2.79	2.65
AEER (W/W)	4	4	4	4	4	4	4
Compressor type	GMCC rotor/ Hitachi Scroll	Hitachi Scroll	Hitachi Scroll	Hitachi Scroll	Hitachi Scroll	Hitachi Scroll	Hitachi Scroll
Fan type	EC Fan						
Refrigerant	R410A						
Power supply	380V/50Hz 3P						
Full-load current(A)	68.6	70.3	78.6	86.8	96	106	116
Width (mm)	1800	1800	1800	1800	2200	2200	2200
Depth (mm)	995	995	995	995	995	995	995
Height (mm)	1975	1975	1975	1975	1975	1975	1975
Weight(kg)	600	650	690	690	880	880	880

NOTE:

1. Test conditions: indoor return air temperature 24℃, relative humidity 50%, outdoor temperature 35℃.
2. AEER test conditions: indoor return air temperature and humidity: 24℃/50%RH, outdoor temperature 35℃/25℃/15℃/5℃/ -5℃ respectively.
3. The upflow supply fan set supports two different air outlet methods: vertical top air supply (with on-site air duct) and top front supply.
4. Top front supply mode, can add front up flow kit on site (height increase) or standard height top front supply (factory prefabricated).
5. In order to save fan consumption, efficient cooling, downflow supply air conditioner standard products for the fan sink type, electrostatic floor height recommended ≥ 450mm.
6. In case of special circumstances at the site, the downflow supply air conditioner can support the customization of the optional fan unsinking, or other ways of air supply and return, etc.
7. Working temperature: -20~45℃, less than -20℃ need to add low temperature components.

VCP Series Air Conditioner Outdoor Unit

Product Introduction ▼

VCP series outdoor unit, a new generation of high-efficiency and energy-saving precision air conditioner outdoor unit designed and developed by our company, is divided into two types: single-system and dual-system. The single system outdoor unit is used to match the single system indoor unit or the single cooling system of the dual system indoor unit. The dual system outdoor unit is used to match the indoor unit of dual system.

For VCS series rack AC

For VCA series small room AC

For VCS series rack AC

For VCA series small room AC

Centralized outdoor unit

Conventional outdoor unit
(Single Fan)

Conventional outdoor unit
(Dual Fans)

Conventional outdoor unit ▼

Model	System Num.	Heat exchange	Fan Num.	Air volume	Weight	L×W×H
Unit	PCS	kW	PCS	m3/h	kg	mm
VCP026SF	Single-system	26	1	12000	112	1378×982×740
VCP028SF	Single-system	28	1	11000	120	1378×982×740
VCP034SF	Single-system	34	1	12000	128	1378×982×740
VCP038SF	Single-system	38	1	12000	136	1378×982×740
VCP045SF	Single-system	45	1	15000	138	1578×1275×750
VCP056SF	Single-system	56	1	15000	152	1778×1275×750
VCP066SF	Single-system	66	2	20000	168	1978×1275×740
VCP076SF	Single-system	76	2	22200	178	2178×1275×740
VCP088SF	Single-system	88	2	28000	188	2378×1275×750
VCP096SF	Single-system	96	2	30000	198	2578×1275×750
VCP056DF	Dual-system	56	1	15000	156	1778×1275×750
VCP066DF	Dual-system	66	2	20000	169	1978×1275×740
VCP076DF	Dual-system	76	2	22200	179	2178×1275×740
VCP088DF	Dual-system	88	2	28000	189	2378×1275×750
VCP096DF	Dual-system	96	2	30000	199	2578×1275×750

Centralized outdoor unit ▼

Model	System Num.	Heat exchange	Fan Num.	Air volume	Weight	L×W×H
Unit	PCS	kW	PCS	m3/h	kg	mm
VCP045SV	Single-system	45	1	15000	140	1100×1100×1685
VCP056SV	Single-system	56	1	15000	152	1100×1100×1685
VCP066SV	Single-system	66	1	20000	168	1100×1100×1775
VCP076SV	Single-system	76	1	20000	178	1100×1100×1775
VCP088SV	Single-system	88	1	22000	188	1300×1100×1775
VCP096SV	Single-system	96	1	24000	198	1300×1100×1775
VCP056DV	Dual-system	56	1	15000	152	1100×1100×1685
VCP066DV	Dual-system	66	1	20000	168	1100×1100×1775
VCP076DV	Dual-system	76	1	20000	178	1100×1100×1775
VCP088DV	Dual-system	88	1	22000	188	1300×1100×1775
VCP096DV	Dual-system	96	1	24000	198	1300×1100×1775
VCP110DV	Dual-system	110	2	30000	230	2210×1100×1685
VCP130DV	Dual-system	130	2	36000	252	2210×1100×1775
VCP150DV	Dual-system	150	2	37200	262	2210×1100×1775
VCP160DV	Dual-system	160	2	39000	272	2500×1100×1775
VCP180DV	Dual-system	180	2	45000	282	2500×1100×1775

Integrated power distribution cabinet

Power Range ▼

15 ~ 150kVA

Working method ▼

Three phase in, three phase out, double conversion online work.

Applications ▼

Widely used in IDC data centers, network servers and workstations, control systems, communication systems, office environment applications, etc.

Product Description ▼

It integrates the power supply and distribution system of the server room (ATS/MCCB, air conditioning distribution, lighting distribution, UPS power supply, UPS input and output distribution, IT distribution) into one cabinet, which is highly reliable, easy to use and easy to maintain.

Performance Features ▼

- High power density: modular design, on-demand configuration, supports up to 150kVA.
- Integrated design: UPS power supply and power distribution are integrated in one cabinet.
- High efficiency and energy saving: the system efficiency is up to 95% or more.
- Intelligent HMI: 7-inch LCD color touch large screen, displaying a rich amount of information parameters.
- Flexible installation method: server cabinet type appearance, can be installed directly inside the micro module.

Technical parameters ▼

			Integrated power distribution cabinet		
Input	System Capacity		15 ~ 45kVA	45 ~ 90kVA	90 ~ 150kVA
	Rated Voltage		380/400/415VAC (L-L)		
	Rated Frequency		50/60Hz		
	Input PF		> 0.99		
	THDi		THDi < 3%		
	Voltage Range		228~478VAC (L-L)		
	Frequency Range		40 ~ 70Hz		
Output	Rated Voltage		380/400/415VAC (L-L)		
	Rated Frequency		50/60Hz		
	Output PF		1		
	Voltage Precision		±1%		
	THDu		THDu≤1%		
Configuration	Input Method		MCCB/ATS,Support single and dual inputs		
	Input Specification		160A	250A	400A
	Output	AC/Others	4* (63A/3P or 40A/3P)		
		Lighting/weak power/other	3*16A/1P		
		IT	2* (12*32A/1P)	2* (24*32A/1P)	2* (36*32A/1P)
System	Efficiency		> 95%		
	Display		7" LCD color touch screen		
	Lightning Protection		20kA , 8/20μs		
	Communication Interface		RS485		
	Size		600*1200*2000		
	Inlet Method		Up in and up out		
	Color		RAL9004		
	IP Class		IP20		

Integrated Service System

Excellent operation management

Process-based standardized management realizes high-efficiency, quality and cost management.

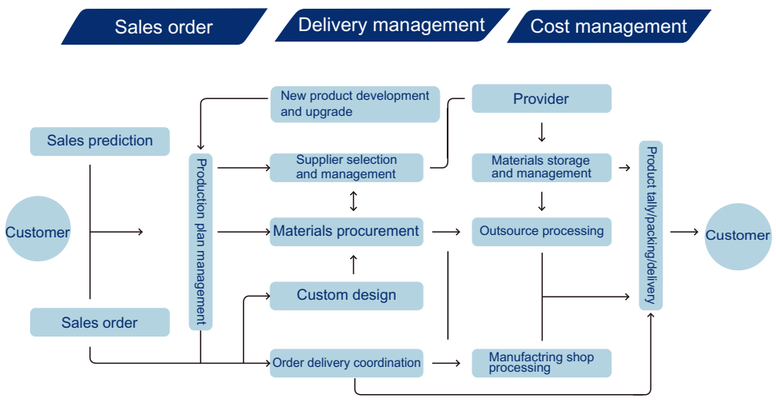

Implement a fully integrated service system, with customer demand as the starting point, customer satisfaction as the end point, and carry out product life cycle control.

Applications

Education Industry

- Nanjing University of Posts and Telecommunications
- Xinchang College, Zhejiang Radio and Television University
- Xinchang County Chengdong Experimental School
- Xicheng Kindergarten, Jintan District, Changzhou City
- Hebei Dingxing Middle School
- Taiyuan University of Technology
- Harbin Songjiang Education Bureau
- Nanjing Agricultural College
- Fangshan Branch of Nanjing Foreign Language School
- Shaanxi University of Technology
- Taiyuan Normal University
- Sinan Middle School of Guizhou Province
- Tianjin No. 100 Middle School

Medical Industry

- Heilongjiang Cancer Hospital
- Shantou Chenghai Maternity and Child Health Hospital
- Yangchun Gangqiao Hospital of Yangjiang City
- Xiangtan County Maternal and Child Health Hospital
- Haicheng Central Hospital
- Pingtang County People's Hospital
- The First People's Hospital of Wuhu
- Shanxi Cancer Hospital
- Shanwei City Health and Family Planning Bureau
- Zhangjiakou Maternity and Child Health Hospital
- Baishui County Hospital of Traditional Chinese Medicine
- People's Hospital of Zheng'an County, Zunyi City
- Beishan Hospital, Wuzhou Workers' Hospital

Government Agency

- Zhuhai City Health and Family Planning Bureau
- Shenzhen Yantian Commission for Discipline Inspection
- Kunming Highway Bureau
- Qinghai Water Resources Bureau
- Suzhou City Government Building 5
- International Migration Administration
- Yugan County People's Government
- Wuzhong District Political and Legal Committee
- Yuncheng Grain Bureau
- Changzhou Xinbei District Government
- Anyang Meteorological Bureau
- National Bureau of Statistics Zhuzhou Investigation Team
- Education Bureau of Songbei District, Harbin City

Judicial and Enforcement Agency

- Dali City People's Procuratorate
- Hubei Provincial People's Procuratorate
- Luliang City Intermediate People's Court
- Heping District People's Court of Shenyang City
- Beipiao Intermediate People's Court
- Rizhao Court of Qingdao Maritime Court
- Dongchuan Public Security Branch of Xining City
- Public Security Bureau of Binzhou City, Xi'an
- Hengkou Public Security Bureau of Ankang City
- Le'an County Forest Public Security Bureau
- Baimalong compulsory drug rehabilitation, Hunan Province
- Chaling County Prison, Zhuzhou City
- Bingtuan Prison Administration Command Center

Service Industry

- Zhumadian Children's Palace, Henan Province
- Taicang Radio and Television Station, Jiangsu Province
- Suqian Radio and Television Station, Jiangsu Province
- Jilin TV Station
- Huaibei Daily News
- Computer Room of Hengyang Hongguang Logistics Park
- Jiudongtian Tourist Scenic Area
- Zhijindong Scenic Area, Bijie City
- Wulingyuan Scenic Area, Zhangjiajie City
- Wuhan Botanical Garden, Chinese Academy of Sciences
- Dongying Huatai Hotel
- Changsha Convention and Exhibition Center Hotel
- Lhasa Wanda Shopping Center, Tibet Autonomous Region

Other Applications
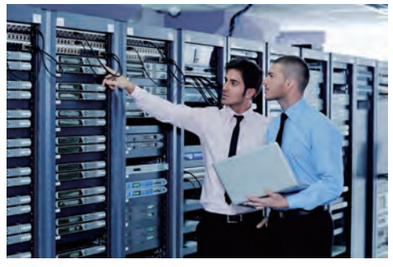
- Zhangjiagang Power Supply Bureau
- Changsha Research Institute of Mining and Metallurgy
- Zhangjiagang Feixiang Chemical Computer Room
- Hebei Chengan Rural Credit Cooperative
- Kunlun Bank, Urumqi Yingbin Road Sub-branch
- Changde Economic Investment Data Center
- Hengyang Rural Commercial Bank
- Jilin Agricultural Credit Company
- Suzhou Wuzhong Economic Development Zone
- Lanzhou New District Flower Auction Center
- Huaqin Communications Wuxi R&D Center
- CRRC Changde Production Base
- Office Building of Hami Tobacco Company