X-Ray Baggage Scanner

AT 100100

Product highlights

* Multilingual operation
* Automatic built in test and self diagnosis
* Secure access Key
* Continuous working 10000 hours above
* Threat alert and material classification
* International standard configuration:
  Japan Hammatsu detection and UK Senstech board
* Network-Ready
* Energy saving design
* One key turn off
* Drugs and explosives inspection
* Indication of the date and time

Dimensional Drawing

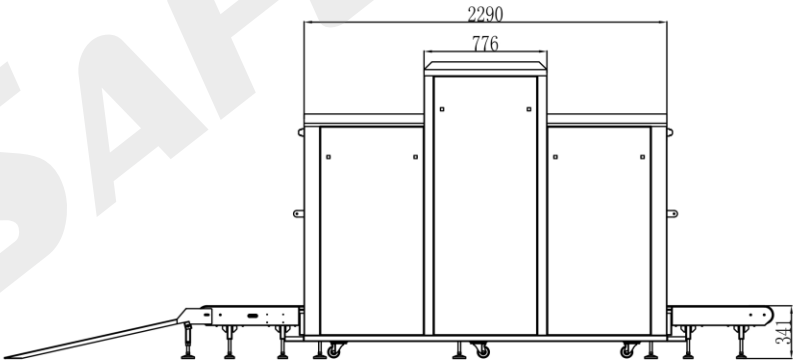

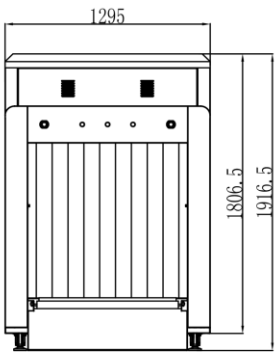

Important Sizes :

Product Size: 3638.5* 1295 * 1916.5mm (L × W × H)

Tunnel Size: 1010* 1003mm (width × height)

SAFEWAY SYSTEM

Product Details

General Specifications

Unit weight	942 kgs
Unit size	3638.5(L)*1295(W)*1916.5(H) mm
Tunnel size(mm)	1010(L)*1003(W)
Conveyor Speed(m/s)	0.2
Conveyor height(mm)	338.5
Conveyor Max Load(kgs)	200
Penetration	Typical 32mm steel, guarantee 30mm steel
Wire Resolution	Typical AWG38, guarantee AWG36
X-Ray dosage each inspection	Typical 1.5 μGy/h, guarantee 2.0 μGy/h
Boundary Leakage	Typical 1.0 μGy/h, guarantee 1.5 μGy/h
Power consumption	Max.1.0 KVA
S/N ratio	<60dB
Film Safety	Guarantee ASA/ISO1600 Film

Configuration

X-Ray generator	160KV, oil cooling, from top to bottom
Imaging System	Japan Hammatsu detector + UK Sens-tech PCBA
Computer	CPU: Intel Celeron 2.60-2.70GHz, hard drive 500G, Storage 2G
Monitor	Dell or Acer, 17" LED sceen, resolution 1280*1024 pixels
Operation table	Double screen console
Keyboard	AT2005, designed by Safeway System
Operation System	Windows XP

Software

Image Enhancement	1-64times enlargement continuity, Color/BW, negative,high/lowpenetration, organic /inorganic Stripping, general enhancement, and pseudo color,etc.
Image Recall	30 preceding images recallable,retrieval.
Image Archive	Up to 50,000 images stored automatically, enable transferring to USB disk, and converting to JPG, BMP, XF, PNG, TIFF, GIF six formats.
Other Functions	Time/date display, counters, user management, system-on/X-ray-on timers, power on self test, built-in diagnostic facilities, dual-direction scanning, system log, system standby and stimulant training, ADS etc.
Network Applications	Multiple remote applications available based on Ethernet LAN and windows platform, such as image centralized storage and identify, recheck workstation, and network TIP, etc (Optional).

Operating Environment

Operation temperature/Humidity	5C-40C / 0%-90%(non-condensing)
Storage temperature/Humidity	-20C-60C / 10%-90%(non-condensing)
Operation Power	220VAC(±10%) 50±3Hz (Optional: 100VAC,110VAC,120VAC,200VAC)

SAFEWAY SYSTEM

SAFEWAY INSPECTION SYSTEM LIMITED

First Factory: BuildingA, QiFeng Digital Park, BaiNiKeng, PingHu Street, LongGang, Shenzhen, China
Second Factory: Building B, ShengLongXing Industrial Park, LongTeng Road, PingDi Street, LongGang, Shenzhen, China
Tel: +86 - 755-6195 5772 / Fax: +86 - 755-6195 5788
Mobile&Whatsapp: + 86- 136 7021 3490 Skype: sophia.xiong8105
Email: sophia@cargovehicleinspection.com
Website: www.cargovehicleinspection.com