Specifications

GNSS Characteristics[1]	
Channels	555
GPS	L1 C/A, L1C, L2C, L2P, L5
GLONASS	L1 C/A, L2 C/A, L2P, L3, L5
Galileo	E1, E5, AltBOC, E5a, E5b, E6
BeiDou	B1, B2, B3
NavIC (IRNSS)	L5
SBAS	L1, L5
QZSS	L1C/A, L1C, L2C, L5, L6
L-Band	NovAtel TerraStar

GNSS Accuracies[2]	
Network RTK	Horizontal: 8 mm + 0.5 ppm RMS Vertical: 15 mm + 0.5 ppm RMS Initialization Time: < 10 s Initialization Reliability: > 99.9%
Real time kinematics (RTK)	Horizontal: 8 mm + 1 ppm RMS Vertical: 15 mm + 1 ppm RMS Initialization Time: < 5 s Initialization Reliability: > 99.9%
High-precision Static	Horizontal: 3.0 mm + 0.1 ppm RMS Vertical: 3.5 mm + 0.4 ppm RMS
Code differential	Horizontal: 25 cm RMS Vertical: 50 cm RMS
SBAS	50 cm RMS
Single Point l1/l2	1.2 m RMS
Single Point L1	1.5 m RMS

Hardware	
Size (H × W)	135 mm × 116 mm (5.3 in x 4.6 in)
Weight	1.1 kg (2.4 lb)
Environment	Operating: -40°C to +65 °C (-40°F to +149°F) Storage: -40°C to +85°C (-40°F to +185°F)
Humidity	100% condensatio
Ingress protection	IP67 waterproof and dustproof, protected from temporary immersion to depth of 1 m
Shock	Survive a 2-meter pole drop
LCD	128 x 64 dpi sunlight readable with function/power buttons
Tilt sensor	EBubble leveling

Certifications and Calibrations
CE Mark; C-Tick; Bluetooth EPL; IGS & NGS Antenna Calibration; MIL-STD-810G, Method 514.7

Communications and Data Recording	
Network modem	Integrated 4G modem LTE (FDD): B1, B2, B3, B4, B5, B7, B8, B20 DC-HSPA+/HSPA+/HSPA/UMTS: B1, B2, B5, B8 EDGE/GPRS/GSM 850/900/1800/1900 MHz
Wi-Fi	802.11 b/g/n, access point mode
Bluetooth®	V4.1
Ports	1 x 7-pin LEMO port (external power, RS-232) 1 x USB 2.0 port (data download, firmware update) 1 x UHF antenna port (TNC female)
UHF radio	Standard Internal Rx/Tx: 410 MHz to 470 MHz Transmit Power: 0.5 W to 2 W Protocol: CHC, Transparent, TT450 Range: up to 5 km under optimal conditions
Data formats	CMR, CMR+ input and output RTCM 2.x, RTCM 3.x input and output NMEA 0183 output HCN, HRC and RINEX static formats NTRIP Client, NTRIP Caster
Data storage	32 GB high-speed memory

Electrical	
Power consumption	3.8 W (depending on receiver configuration)
Li-ion battery capacity	2 × 3400 mAh, 7.4 V
Operating time on internal battery[3]	UHF receive/transmit (0.5 W): Up to 6 h Cellular receive only: Up to 9 h Static: Up to 10 h
External power	9 V DC to 36 V DC

*Specifications are subject to change without notice.

(1) Subject to availability of BDS ICD and Galileo commercial service definition. GLONASS L3, BDS B3 and Galileo E6 will be provided through future firmware upgrade.
(2) Accuracy and reliability are determined under clear unobstructed conditions, multipath, satellite geometry and atmospheric conditions. Performances assume minimum of 5 satellites, follow up of recommended general GPS practices.
(3) Battery life may vary depending on operating temperature.

© 2018 Shanghai Huace Navigation Technology Ltd. All rights reserved. The Bluetooth ® world mark and logos are owned by Bluetooth SIG, Inc. The CHC and CHC logo are trademarks of Shanghai Huace Navigation Technology Limited. All other trademarks are the property of their respective owners – Revision August 2018

Shanghai Huace Navigation Technology Ltd.

599 Gaojing Road, Building D
Shanghai, 201702, China

+86 21 54260273 WWW.CHCNAV.COM

CHCNAV

i70+

Survey & Engineering

Make your work more efficient

Hardware Description

i70+
GNSS RTK Receiver

Leveraging the latest GNSS technologies, the i70+ is a smart receiver of the next generation. The proven and outstanding performance and reliability make it the preferred choice of surveyors and construction professionals.

The i70+ benefits from a compact ergonomic and rugged design with integrated sensors (4G network modem, UHF Radio, Wi-Fi, Bluetooth and e-bubble).

Supporting a high-resolution LCD, the operating status of the receiver is available at a glance.

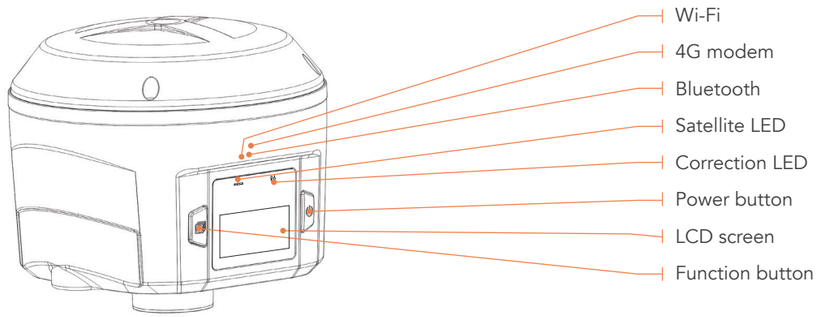

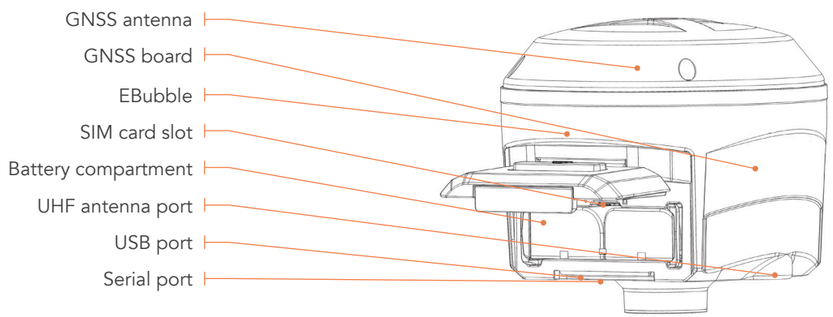

Core Technology

555 channels - Full GNSS

High-precision tracking of GPS, GLONASS, Galileo, BeiDou and SBAS.

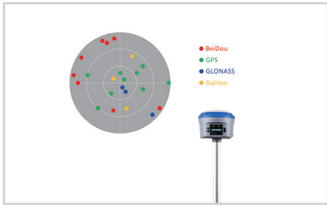

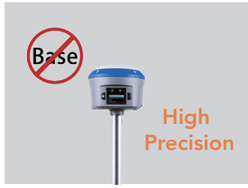

L-Band PPP

Compatible with L-Band, i70+ can work either as a base or rover without any limitation in remote regions where the cell coverage or GNSS base stations are not available.

Internal 4G network modem

Embedded 4G modem for stable network RTK connections. The i70+ can also be set as Wi-Fi hotspot for the controller to access the Internet.

Integrated UHF modem

i70+ integrated UHF modem can be set at frequencies between 410 MHz - 470 MHz with up to 5 km working range.

Rugged design

The rugged and durable design meets the IP67 environmental standard for water and dust. The i70+ can survive a 2 m drop onto concrete.

Applications