This product has been discontinued

Spec Sheet

Cisco UCS C220 M4 High-Density Rack Server (Large Form Factor Disk Drive Model)

Cisco Systems
170 West Tasman Dr
San Jose, CA, 95134
www.cisco.com

Publication History

Rev E.16 May 13, 2019

CONTENTS

OVERVIEW 3
DETAILED VIEWS 4
Chassis Front View 4
Chassis Rear View 5
BASE SERVER STANDARD CAPABILITIES and FEATURES 6
CONFIGURING the SERVER 10
STEP 1 VERIFY SERVER SKU 11
STEP 2 SELECT LOCKING SECURITY BEZEL (OPTIONAL) 12
STEP 3 SELECT CPU(s) 13
STEP 4 SELECT MEMORY 15
STEP 5 SELECT RAID CONTROLLERS 21
RAID Controller Options (internal HDD/SSD support) 21
Cisco 12G SAS Modular RAID Controller 21
SAS HBA (internal HDD/SSD/JBOD support) 21
SAS HBA (external JBOD support) 21
RAID Volumes and Groups 21
STEP 6 SELECT HARD DISK DRIVES (HDDs) or SOLID-STATE DRIVES (SSDs) 27
STEP 7 SELECT SED HARD DISK DRIVES (HDDs) or SOLID-STATE DRIVES (SSDs) 29
STEP 8 SELECT PCIe OPTION CARD(s) 31
STEP 9 ORDER OPTIONAL NETWORK CARD ACCESSORIES 35
STEP 10 ORDER POWER SUPPLY 40
STEP 11 SELECT AC POWER CORD(s) 41
STEP 12 ORDER TOOL-LESS RAIL KIT AND OPTIONAL REVERSIBLE CABLE MANAGEMENT ARM . 44
STEP 13 SELECT NIC MODE (OPTIONAL) 45
STEP 14 ORDER A TRUSTED PLATFORM MODULE (OPTIONAL) 46
STEP 15 ORDER CISCO FLEXIBLE FLASH SD CARD MODULE (OPTIONAL) 48
STEP 16 ORDER OPTIONAL USB 3.0 DRIVE 49
STEP 17 SELECT OPERATING SYSTEM AND VALUE-ADDED SOFTWARE 50
STEP 18 SELECT OPERATING SYSTEM MEDIA KIT 53
STEP 19 SELECT SERVICE and SUPPORT LEVEL 54
OPTIONAL STEP - ORDER RACK(s) 59
OPTIONAL STEP - ORDER PDU 60
SUPPLEMENTAL MATERIAL 61
CHASSIS 61
Block Diagram 62
CPUs and DIMMs 63
Physical Layout 63
Memory Population Rules 64
DIMM Population Order 65
Recommended Memory Configuration 66
Additional DIMM Populations 68
RAID Details 69
RAID Option ROM (OPROM) Settings 70
Serial Port Details 71
Upgrade and Servicing-Related Parts 72
Adding an Additional CPU (with CPU heat sink) or Replacing CPUs 73
Motherboard Lithium Battery 73
Thermal Grease (with syringe applicator) for CPU to Heatsink Seal 73
Air Baffle Replacement Kit 74
CPU Heat Sink Cleaning Kit 74

CONTENTS

RACKS 75
PDUs 77
KVM CABLE 78
Motherboard USB and SD Ports, and RAID Card Backup Location 79
TECHNICAL SPECIFICATIONS 80
Dimensions and Weight 80
Power Specifications 81
Environmental Specifications 82
Compliance Requirements 83
Discontinued EOL Products 85

OVERVIEW

The Cisco® UCS C220 M4 LFF rack server is the newest 2-socket, 1U rack server from Cisco, designed for both performance and expandability over a wide range of storage-intensive infrastructure workloads from web serving to distributed database.

The enterprise-class UFCS C220 M4 LFF server extends the capabilities of Cisco's Unified Computing System portfolio in a 1U form factor with the addition of the Intel Xeon E5-2600 v3 and v4 series processor family that deliver significant performance and efficiency gains. In addition, the UCS C220 M4 SFF server provides 24 DIMM slots, up to 4 drives and 2 x 1 GbE LAN-on-motherboard (LOM) ports delivering outstanding levels of density and performance in a compact 1U package.

The C220 M4 SFF server includes a modular LAN on motherboard (mLOM) slot for installation of a Cisco Virtual Interface Card (VIC) or third-party network interface card (NIC) without consuming a PCI slot in addition to 2 x 1 GbE embedded (on the motherboard) LOM ports. These features combine to provide outstanding levels of internal memory and storage expandability along with exceptional performance.

The Cisco UCS C240 M4 LFF server can be used standalone, or as part of the Cisco Unified Computing System, which unifies computing, networking, management, virtualization, and storage access into a single integrated architecture enabling end-to-end server visibility, management, and control in both bare metal and virtualized environments.

Figure 1 Cisco UCS C220 M4 High-Density LFF Rack Server

Front View

Rear View

DETAILED VIEWS

Chassis Front View

Figure 2 shows the front view of the Cisco UCS C220 M4 High-Density LFF Rack Server.

Figure 2 Chassis Front View

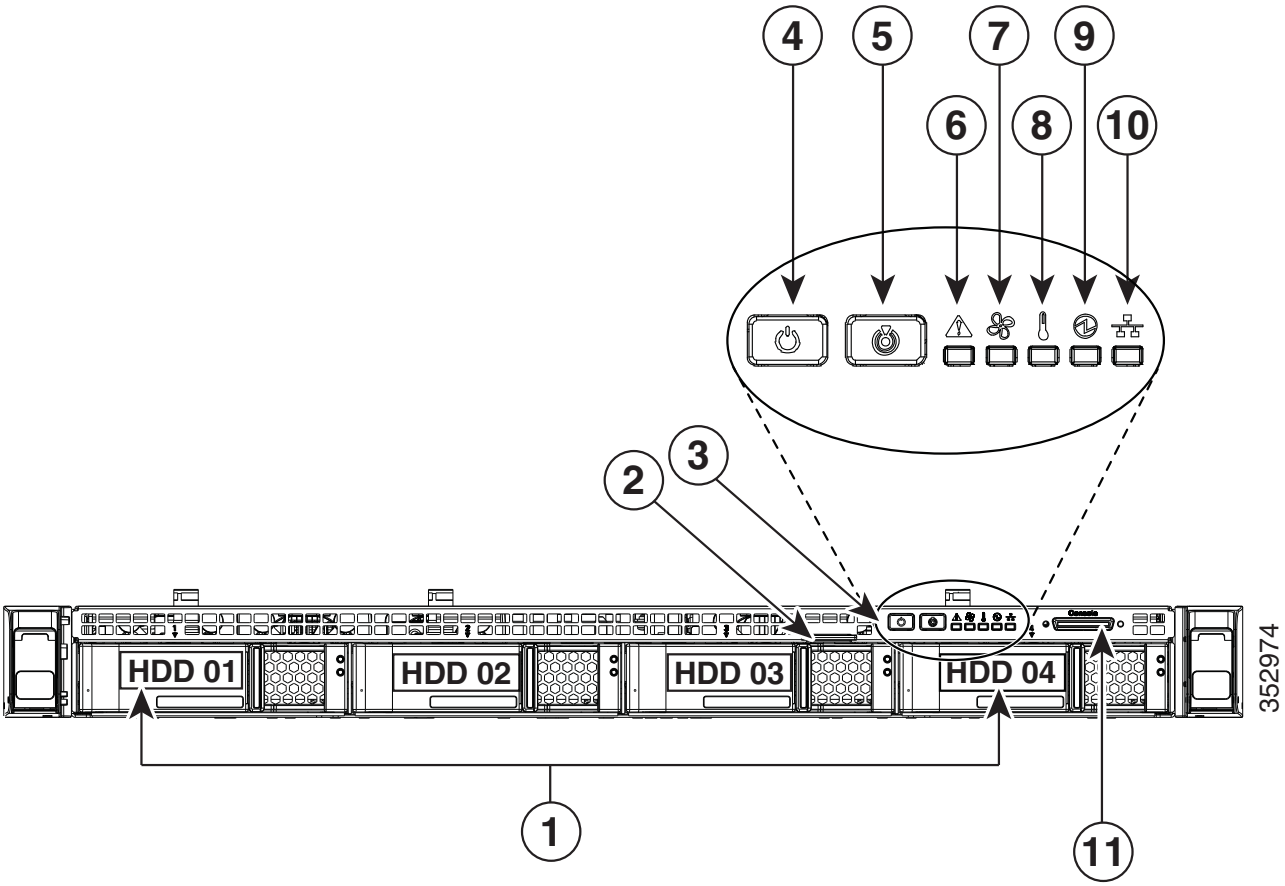

1	Drives (up to four 3.5-inch drives)	7	Fan status LED
2	Pull-out asset tag	8	Temperature status LED
3	Operations panel buttons and LEDs	9	Power supply status LED
4	Power button/Power status LED	10	Network link activity LED
5	Unit identification button/LED	11	KVM connector (used with KVM cable that provides two USB 2.0, one VGA, and one serial connector[1]
6	System status LED		

Notes . . .

1. For more information about the KVM cable connection, see **KVM CABLE, page 78**

Chassis Rear View

Figure 3 shows the external features of the rear panel.

Figure 3 Chassis Rear View

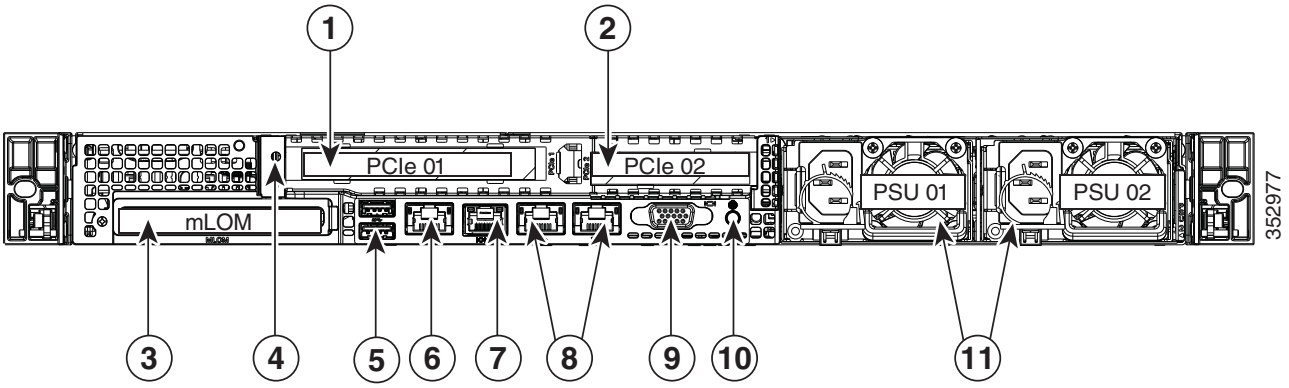

1	PCIe riser 1/slot 1	**7**	Serial port (RJ-45 connector)[1]
2	PCIe riser 2/slot 2	**8**	Two embedded (on the motherboard) Intel i350 GbE Ethernet controller ports LAN1 is left connector, LAN2 is right connector
3	Modular LAN-on-motherboard (mLOM) card slot	**9**	VGA video port (DB-15)
4	Grounding-lug hole (for DC power supplies)	**10**	Rear Identification button/LED
5	USB 3.0 ports (two)	**11**	Power supplies (up to two, redundant as 1+1)
6	1-Gb Ethernet dedicated management port		

Notes . . .

1. For details of the serial port pinout, see **Serial Port Details, page 71**.

BASE SERVER STANDARD CAPABILITIES and FEATURES

Table 1 lists the capabilities and features of the base server. Details about how to configure the server for a particular feature or capability (for example, number of processors, disk drives, or amount of memory) are provided in **CONFIGURING the SERVER, page 10**.

Table 1 Capabilities and Features

Capability/Feature	Description
Chassis	One rack unit (1RU) chassis
CPU	One or two Intel® Xeon E5-2600 v3 or v4 series processor family CPUs
Chipset	Intel® C610 series chipset
Memory	24 slots for DDR4 registered DIMMs (RDIMMs) or load-reduced DIMMs (LRDIMMs)
Multi-bit Error Protection	This server supports multi-bit error protection.
Embedded NIC	Two embedded (on the motherboard) Intel i350 GbE ports, supporting the following: ■ Pre-Execution Boot (PXE boot) ■ iSCSI boot ■ Checksum and segmentation offload ■ NIC teaming
Expansion slots	■ Riser 1 (controlled by CPU 1): • One full-height profile, 3/4-length slot with x24 connector and x16 lane ■ Riser 2 (controlled by CPU 2): • One half-height profile, half-length slot with x24 connector and x16 lane, or ■ Dedicated Cisco 12G SAS Modular RAID controller slot (see *Figure 6 on page 61*) • An internal slot is dedicated for the 12G SAS Modular RAID controller card.
Internal storage devices	Drives are installed into front-panel drive bays that provide hot-pluggable access. • Large Form Factor (LFF) drives. Up to four 3.5-inch SAS hot-swappable hard disk drives (HDDs)[1]. ■ The server also contains one internal USB 3.0 port on the motherboard that you can use with a an optional 16 GB USB thumb drive for additional storage ■ UCS Storage Accelerators are also available. These PCIe flash storage devices provide independent high-speed storage.

Table 1 Capabilities and Features *(continued)*

Capability/Feature	Description
Cisco Flexible Flash drives	The server supports up to two internal 32 GB or two internal 64 GB Cisco Flexible Flash drives (SD cards). The second SD card is blank and can be used to mirror the first SD card. It can be used to protect the Hypervisor Partition with RAID1.
Video	The Cisco Integrated Management Controller (CIMC) provides video using the Matrox G200e video/graphics controller: ■ Integrated 2D graphics core with hardware acceleration ■ DDR2/3 memory interface supports up to 512 MB of addressable memory (8 MB is allocated by default to video memory) ■ Supports display resolutions up to 1920 x 1200 16bpp @ 60Hz ■ High-speed integrated 24-bit RAMDAC ■ Single lane PCI-Express host interface running at Gen 1 speed
Interfaces	■ Rear panel • One DB15 VGA connector • One RJ45 serial port connector • Two USB 3.0 port connectors • One RJ-45 10/100/1000 Ethernet management port, using Cisco Integrated Management Controller (CIMC) firmware • Two Intel i350 embedded (on the motherboard) GbE LOM ports • One flexible modular LAN on motherboard (mLOM) slot that can accommodate various interface cards ■ Front panel • One KVM console connector (supplies two USB 2.0 connectors, one VGA DB15 connector, and one serial port (RS232) RJ45 connector) ■ Various PCIe card ports (dependent on which cards are installed) • Virtual Interface Card (VIC) ports • Converged Network Adapter (CNA) ports • Network Interface Card (NIC) ports • Host Bus Adapter (HBA) ports

Table 1 Capabilities and Features *(continued)*

Capability/Feature	Description
Storage controller	■ Cisco 12G SAS Modular RAID controller card with internal SAS connectivity. • Supports up to 24 internal drives (note however that this server can be configured with a maximum of 4 drives) • Plugs into a dedicated RAID controller slot • Can be purchased alone, or along with an onboard Flash-Backed Write Cache (FBWC) upgrade option, as shown in the table below

RAID Card Version	Supported RAID Levels	Onboard TMM Cache
UCSC-MRAID12G[1]	JBOD, 0, 1, 10	None
UCSC-MRAID12G-512[2]	JBOD, 0, 1, 5, 50	512 MB
UCSC-MRAID12G-1GB[2]	JBOD, 0, 1, 10, 5, 6, 50, 60	1 GB
UCSC-MRAID12G-2GB[2]	JBOD, 0, 1, 10, 5, 6, 50, 60	2 GB
UCSC-MRAID12G-4GB[2]	JBOD, 0, 1, 10, 5, 6, 50, 60	4 GB

Notes . . .

1. Base RAID controller card (RAID 0, 1, 10 only)
2. FBWC option for base RAID controller card (adding the FBWC option extends the RAID levels)

■ Cisco 12 Gbps Modular SAS HBA with internal SAS connectivity

- Supports up to 24 internal drives (only 4 drives supported in this server)
- Plugs into a dedicated PCIe slot at the rear of the server (slot 1 of riser 1)
- Supports JBOD only, not RAID, as shown in the below table.

HBA Card Version	Supported RAID Levels
UCSC-SAS12GHBA	JBOD only

■ Cisco 9300-8E 12G SAS HBA with external SAS connectivity

- Provides 8 external SAS ports
- Plugs into a PCIe slot at the rear of the server
- No FBWC (cache) or cache power backup
- SAS 3.0 compliant

Table 1 Capabilities and Features *(continued)*

Capability/Feature	Description
Modular LAN on Motherboard (mLOM) slot	The mLOM slot can flexibly accommodate the following cards: ■ Cisco Virtual Interface Cards (VIC) ■ Quad Port Intel i350 1GbE RJ45 Network Interface Card (NIC) **NOTE:** The four Intel i350 ports are provided on an optional card that plugs into the mLOM slot, and are separate from the two embedded (on the motherboard) LAN ports
WoL	The 1-Gb Base-T Ethernet LAN ports support the wake-on-LAN (WoL) standard.
Front Panel	A front panel controller provides status indications and control buttons
Power subsystem	Up to two 770 W (AC) hot swappable power supplies or two 1050 W (DC) power supplies. One is mandatory; one more can be added for 1 + 1 redundancy.
ACPI	This server supports the advanced configuration and power interface (ACPI) 4.0 standard.
Fans	Chassis: ■ Six hot-swappable fans for front-to-rear cooling
Integrated management processor	Baseboard Management Controller (BMC) running Cisco Integrated Management Controller (CIMC) firmware. Depending on your CIMC settings, the CIMC can be accessed through the 1-GbE dedicated management port, the 1-GbE LOM ports, or a Cisco virtual interface card (VIC).

Notes . . .

1. The drives are available as both self-encrypted drives (SED) and non self-encrypted drives.

CONFIGURING the SERVER

Follow these steps to configure the Cisco UCS C220 M4 High-Density LFF Rack Server:

- STEP 1 VERIFY SERVER SKU, page 11
- STEP 2 SELECT LOCKING SECURITY BEZEL (OPTIONAL), page 12
- STEP 3 SELECT CPU(s), page 13
- STEP 4 SELECT MEMORY, page 15
- STEP 5 SELECT RAID CONTROLLERS, page 21
- STEP 6 SELECT HARD DISK DRIVES (HDDs) or SOLID-STATE DRIVES (SSDs), page 27
- STEP 7 SELECT SED HARD DISK DRIVES (HDDs) or SOLID-STATE DRIVES (SSDs), page 29
- STEP 8 SELECT PCIe OPTION CARD(s), page 31
- STEP 9 ORDER OPTIONAL NETWORK CARD ACCESSORIES, page 35
- STEP 10 ORDER POWER SUPPLY, page 40
- STEP 11 SELECT AC POWER CORD(s), page 41
- STEP 12 ORDER TOOL-LESS RAIL KIT AND OPTIONAL REVERSIBLE CABLE MANAGEMENT ARM, page 44
- STEP 13 SELECT NIC MODE (OPTIONAL), page 45
- STEP 14 ORDER A TRUSTED PLATFORM MODULE (OPTIONAL), page 46
- STEP 15 ORDER CISCO FLEXIBLE FLASH SD CARD MODULE (OPTIONAL), page 48
- STEP 16 ORDER OPTIONAL USB 3.0 DRIVE, page 49
- STEP 18 SELECT OPERATING SYSTEM MEDIA KIT, page 53
- STEP 19 SELECT SERVICE and SUPPORT LEVEL, page 54
- OPTIONAL STEP - ORDER RACK(s), page 59
- OPTIONAL STEP - ORDER PDU, page 60

STEP 1 VERIFY SERVER SKU

Verify the product ID (PID) of the server as shown in *Table 2*.

Table 2 PID of the C220 M4 High-Density LFF Rack Base Server

Product ID (PID)	Description
UCSC-C220-M4L	UCS C220 M4 LFF, no CPU, memory, HDD, power supply, SD cards, PCIe cards, or tool-less rail kit
UCSC-10PK-C220M4[1]	MULTIPACK:10-Pk C220 M4 w/blanking panels, packaging

Notes . . .

1. This selection allows you to order a quantity of 10 servers, all packaged together.

The Cisco C220 M4 server:

- Does not include power supply, CPU, memory, hard disk drives (HDDs), SD cards, rail kit, plug-in PCIe cards.

NOTE: Use the steps on the following pages to configure the server with the components that you want to include.

STEP 2 SELECT LOCKING SECURITY BEZEL (OPTIONAL)

An optional locking bezel can be mounted to the front of the chassis to prevent unauthorized access to the drives.

Select the locking bezel from *Table 3*.

Table 3 Locking Bezel Option

Product ID (PID)	Description
UCSC-BZL-C220M4	C220 M4 Security Bezel

STEP 3 SELECT CPU(s)

The standard CPU features are:

- Intel Xeon E5-2600 v3 and v4 series processor family CPUs
- Intel C610 series chipset
- Cache size of up to 55 MB

Select CPUs

The available CPUs are listed in *Table 4*.

Table 4 Available Intel CPUs

Product ID (PID)	Intel Number	Clock Freq (GHz)	Power (W)	Cache Size (MB)	Cores	QPI	Highest DDR4 DIMM Clock Support (MHz)[1]
E5-2600 v4 Series Processor Family CPUs							
UCS-CPU-E52699AE	E5-2699A v4	2.40	145	55	22	9.6 GT/s	2400
UCS-CPU-E52699E	E5-2699 v4	2.20	145	55	22	9.6 GT/s	2400
UCS-CPU-E52698E	E5-2698 v4	2.20	135	50	20	9.6 GT/s	2400
UCS-CPU-E52697AE	E5-2697A v4	2.60	145	40	16	9.6 GT/s	2400
UCS-CPU-E52697E	E5-2697 v4	2.30	145	45	18	9.6 GT/s	2400
UCS-CPU-E52695E	E5-2695 v4	2.10	120	45	18	9.6 GT/s	2400
UCS-CPU-E52690E	E5-2690 v4	2.60	135	35	14	9.6 GT/s	2400
UCS-CPU-E52683E	E5-2683 v4	2.10	120	40	16	9.6 GT/s	2400
UCS-CPU-E52680E	E5-2680 v4	2.40	120	35	14	9.6 GT/s	2400
UCS-CPU-E52667E	E5-2667 v4	3.20	135	25	8	9.6 GT/s	2400
UCS-CPU-E52660E	E5-2660 v4	2.00	105	35	14	9.6 GT/s	2400
UCS-CPU-E52650E	E5-2650 v4	2.20	105	30	12	9.6 GT/s	2400
UCS-CPU-E52650LE	E5-2650L v4	1.70	65	35	14	9.6 GT/s	2400
UCS-CPU-E52643E	E5-2643 v4	3.40	135	20	6	9.6 GT/s	2400
UCS-CPU-E52640E	E5-2640 v4	2.40	90	25	10	8.0 GT/s	2133
UCS-CPU-E52637E	E5-2637 v4	3.50	135	15	4	9.6 GT/s	2400
UCS-CPU-E52630E	E5-2630 v4	2.20	85	25	10	8/0 GT/s	2133
UCS-CPU-E52630LE	E5-2630L v4	1.80	55	25	10	8.0 GT/s	2133
UCS-CPU-E52623E	E5-2623 v4	2.60	85	10	4	8.0 GT/s	2133
UCS-CPU-E52620E	E5-2620 v4	2.10	85	20	8	8.0 GT/s	2133
UCS-CPU-E52609E	E5-2609 v4	1.70	85	20	8	6.4 GT/s	1866
UCS-CPU-E52658E	E5-2658 v4	2.30	105	35	14	9.6 GT/s	2400
UCS-CPU-E52680D	E5-2680 v3	2.50	120	30	12	8.0 GT/s	2133
UCS-CPU-E52640D	E5-2640 v3	2.60	90	20	8	6.4 GT/s	1866
UCS-CPU-E52620D	E5-2620 v3	2.40	85	15	6	6.4 GT/s	1866

Table 4 Available Intel CPUs *(continued)*

Product ID (PID)	Intel Number	Clock Freq (GHz)	Power (W)	Cache Size (MB)	Cores	QPI	Highest DDR4 DIMM Clock Support (MHz)[1]
UCS-CPU-E52609D	E5-2609 v3	1.90	85	15	6		1600
UCS-CPU-E52658D	E5-2658 v3	2.20	105	30	12	8.0 GT/s	2133

Notes . . .

1. If higher or lower speed DIMMs are selected than what is shown in the table for a given CPU, the DIMMs will be clocked at the lowest common denominator of CPU clock and DIMM clock.

Approved Configurations

(1) 1-CPU configurations:

- Select any one CPU listed in *Table 4 on page 13*.

(2) 2-CPU Configurations:

- Select two identical CPUs from any one of the rows of *Table 4 on page 13*.

Caveats

- You can select either one processor or two identical processors.
- The selection of 1 or 2 CPUs depends on the desired server functionality. See the following sections:
  - **STEP 4 SELECT MEMORY, page 15** (memory mirroring section)
  - **STEP 8 SELECT PCIe OPTION CARD(s), page 31**
  - *Table 9 on page 25* (RAID support table)
- For optimal performance, select DIMMs with the highest clock speed for a given processor (see *Table 4 on page 13*). If you select DIMMs whose speeds are lower or higher than that shown in the tables, suboptimal performance will result.

STEP 4 SELECT MEMORY

The standard memory features are:

- DIMMs
  - Clock speed: 2400 or 2133 MHz
  - Ranks per DIMM: 1, 2, 4, or 8
  - Operational voltage: 1.2 V
  - Registered ECC DDR4 DIMMs (RDIMMs) or load-reduced DIMMs (LRDIMMs)
- Memory is organized with four memory channels per CPU, with up to three DIMMs per channel, as shown in *Figure 4*.

Figure 4 C220 M4 LFF Memory Organization

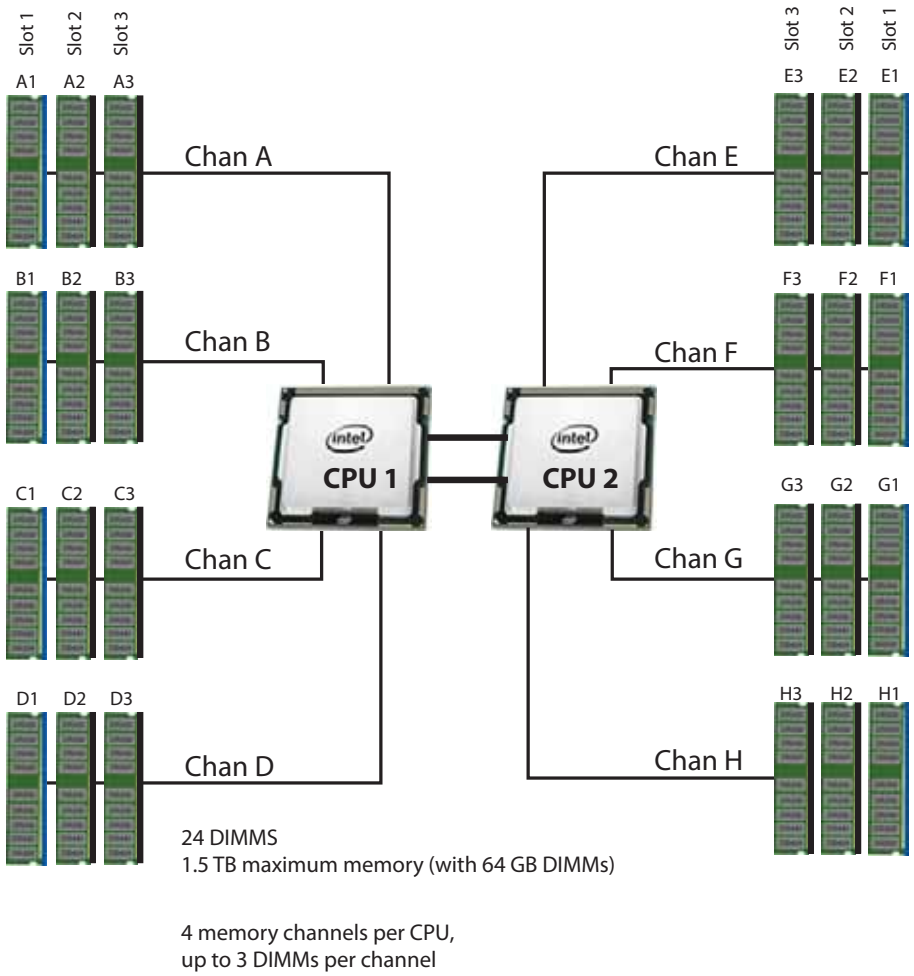

Select DIMMs and Memory Mirroring

Select the memory configuration and whether or not you want the memory mirroring option. The available memory DIMMs and mirroring option are listed in *Table 5*.

NOTE: When memory mirroring is enabled, the memory subsystem simultaneously writes identical data to two channels. If a memory read from one of the channels returns incorrect data due to an uncorrectable memory error, the system automatically retrieves the data from the other channel. A transient or soft error in one channel does not affect the mirrored data, and operation continues unless there is a simultaneous error in exactly the same location on a DIMM and its mirrored DIMM. Memory mirroring reduces the amount of memory available to the operating system by 50% because only one of the two populated channels provides data.

Table 5 Available DDR4 DIMMs

Product ID (PID)	PID Description	Voltage	Ranks /DIMM
2400-MHz DIMM Options			
UCS-ML-1X644RV-A	64GB DDR4-2400-MHz LRDIMM/PC4-19200/quad rank/x4	1.2 V	4
UCS-MR-1X322RV-A	32GB DDR4-2400-MHz RDIMM/PC4-19200/dual rank/x4	1.2 V	2
UCS-MR-1X161RV-A	16GB DDR4-2400-MHz RDIMM/PC4-19200/single rank/x4	1.2 V	1
UCS-MR-1X081RV-A	8 GB DDR4-2400-MHz RDIMM/PC4-19200/single rank/x4	1.2 V	1
Memory Mirroring Option			
N01-MMIRROR	Memory mirroring option		

Approved Configurations

(1) 1-CPU configuration without memory mirroring:

- Select from 1 to 12 DIMMs. Refer to *Memory Population Rules, page 64*, for more detailed information.

(2) 1-CPU configuration with memory mirroring:

- Select 2, 4, 8, or 12 identical DIMMs. The DIMMs will be placed by the factory as shown in the following table.

Total Number of DIMMs	CPU 1 DIMM Placement in Channels (for identical dual-rank DIMMs for 3DPC or identical quad-rank DIMMs for 2DPC)		
	Blue Slots	Black Slots	White Slots

2	(A1, B1)	—	—
4	(A1,B1); (C1,D1)	—	—
8	(A1,B1); (C1,D1)	(A2,B2); (C2,D2)	
12	(A1,B1); (C1,D1)	(A2,B2); (C2,D2)	(A3,B3); (C3,D3)

- Select the memory mirroring option (N01-MMIRROR) as shown in *Table 5 on page 16*.

(3) 2-CPU configuration without memory mirroring:

- Select from 1 to 12 DIMMs per CPU. Refer to **Memory Population Rules, page 64**, for more detailed information.

(4) 2-CPU configuration with memory mirroring:

- Select 2, 4, 8, or 12 identical DIMMs per CPU. The DIMMs will be placed by the factory as shown in the following table.

Number of DIMMs per CPU	CPU 1 DIMM Placement in Channels (for identical dual-rank DIMMs for 3DPC or identical quad-rank DIMMs for 2DPC)			CPU 2 DIMM Placement in Channels (for identical dual-rank DIMMs for 3DPC or identical quad-rank DIMMs for 2DPC)		
	Blue Slots	Black Slots	White Slots	Blue Slots	Black Slots	White Slots
2	(A1, B1)	—	—	(E1, F1)	—	—
4	(A1,B1); (C1,D1)	—	—	(E1,F1); (G1,H1)	—	—
8 (CPU1) and 4 (CPU2)[1]	(A1,B1); (C1,D1)	(A2,B2); (C2,D2)	—	(E1,F1)	(E2, F2)	—
8	(A1,B1); (C1,D1)	(A2,B2); (C2,D2)	—	(E1,F1); (G1,H1)	(E2,F2); (G2,H2)	—
12	(A1,B1); (C1,D1)	(A2,B2); (C2,D2)	(A3, B3) (C3, D3)	(E1,F1); (G1,H1)	(E2,F2); (G2,H2)	(E3,F3); (G3,H3)

Notes . . .

1. Not recommended (for performance reasons)

- Select the memory mirroring option (N01-MMIRROR) as shown in *Table 5 on page 16*.

NOTE: System performance is optimized when the DIMM type and quantity are equal for both CPUs, and when all channels are filled equally across the CPUs in the server.

Caveats

- System speed is dependent on how many DIMMs are populated per channel and the CPU DIMM speed support. See *Table 6 and Table 7 on page 19* for details.

Table 6 2133-MHz DIMM Memory Speeds with Different CPUs

DIMM Speed	DPC	1600-MHz Capable CPU		1866-MHz Capable CPU		2133-MHz Capable CPU	
		LRDIMM (QR)	RDIMM (8R, DR, SR)	LRDIMM (QR)	RDIMM (8R, DR, SR)	LRDIMM (QR)	RDIMM (8R, DR, SR)
2133 DIMM	1DPC	1600	1600	1866	1866	2133	2133
	2DPC	1600	1600	1866	1866	2133	2133
	3DPC	1600	1600	1600	1600	1866	1866 (32 GB RDIMMs and 16 GB DIMMs) 1600 (64 GB TSV RDIMMs, 8 GB RDIMMs)

Table 7 2400-MHz DIMM Memory Speeds with Different v4 CPUs

DIMM and CPU Frequencies	DPC	LRDIMM (QRx4) - 64 GB[1]	RDIMM (2Rx4) - 32 GB	LRDIMM (QRx4) - 32 GB[1]	RDIMM (SRx4) - 16 GB	RDIMM (SRx4) - 8 GB
		1.2 V	1.2 V	1.2 V	1.2 V	1.2 V
DIMM = 2400 MHz CPU = 2400 MHz	1DPC	2400 MHz	2400 MHz	2400 MHz	2400 MHz	2400 MHz
	2DPC[2]	2400 MHz	2400 MHz	2400 MHz	2400 MHz	2400 MHz
	3DPC	2133 MHz	1866 MHz	2133 MHz	2133 MHz	2133 MHz
DIMM = 2400 MHz CPU = 2133 MHz	1DPC	2133 MHz	2133 MHz	2133 MHz	2133 MHz	2133 MHz
	2DPC	2133 MHz	2133 MHz	2133 MHz	2133 MHz	2133 MHz
	3DPC	1866 MHz	1866 MHz	1866 MHz	1866 MHz	1600 MHz
DIMM = 2400 MHz CPU = 1866 MHz	1DPC	1866 MHz	1866 MHz	1866 MHz	1866 MHz	1866 MHz
	2DPC	1866 MHz	1866 MHz	1866 MHz	1866 MHz	1866 MHz
	3DPC	1866 MHz	1600 MHz	1866 MHz	1600 MHz	1600 MHz

Notes . . .

1. Available at a future date
2. When you mix 2400 MHz RDIMMs of different sizes (for example, 8x32GB + 8x16GB), the memory speed clocks one step down to 2133 MHz.

- The C220 M4 server supports four different memory reliability, availability, and serviceability (RAS) modes:
  - Independent Channel Mode
  - Mirrored Channel Mode
  - Lockstep Channel Mode
- Below are the system level RAS Mode combination limitations:
  - Mixing of Independent and Lockstep channel mode is not allowed per platform.
  - Mixing of Non-Mirrored and Mirrored mode is not allowed per platform.
  - Mixing of Lockstep and Mirrored mode is not allowed per platform.
- Do not mix RDIMMs with LRDIMMs
- Do not mix 64GB DDR4-2133-MHz TSV-RDIMMs with any other DIMMs
- Single-rank DIMMs can be mixed with dual-rank DIMMs in the same channel
- Do not mix quad-rank DIMMs with single- or dual-rank DIMMs in the same channel
- For best performance, observe the following:

- DIMMs with different timing parameters can be installed on different slots within the same channel, but only timings that support the slowest DIMM will be applied to all. As a consequence, faster DIMMs will be operated at timings supported by the slowest DIMM populated.
- When one DIMM is used, it must be populated in DIMM slot 1 (farthest away from the CPU) of a given channel.
- When single, dual or quad rank DIMMs are populated for 2DPC or 3DPC, always populate the higher number rank DIMM first (starting from the farthest slot). For a 3DPC example, first populate with quad-rank DIMMs in the DIMM slot 1. Then dual-rank DIMMs in the DIMM 2 slot. Then single-rank DIMMs in the DIMM 3 slot.

- DIMMs for CPU 1 and CPU 2 (when populated) must always be configured identically.
- When using mirroring, DIMMs must be installed in identical pairs across paired DDR4 buses. That is, mirrored pairs in channels A and B must be identical and pairs in channels C and D must be identical. However, the DIMMs used in channels A and B can be different from those in channels C and D.
- Memory mirroring reduces the amount of available memory by 50% (quantity of DIMMs must be even for mirroring).
- Non-ECC DIMMs are not supported.
- Cisco memory from previous generation servers (DDR3) is not compatible with this server

For more information regarding memory, see **CPUs and DIMMs, page 63**.

STEP 5 SELECT RAID CONTROLLERS

RAID Controller Options (internal HDD/SSD support)

Cisco 12G SAS Modular RAID Controller

You can choose the Cisco 12G SAS RAID controller, which plugs into a dedicated RAID controller card slot. This RAID controller supports RAID 0, 1, 10 (without the FBWC option) and supports up to RAID 0, 1, 10, 5, 6, 50, 60 (with the FBWC option).

NOTE: The number of RAID groups (virtual drives) supported per RAID controller is as follows:

- Cisco 12G SAS Modular RAID controller = 64

NOTE: This controller can be ordered with several modular flash-backed write cache (FBWC) options: 512 MB, 1 GB, 2 GB, or 4 GB. If the controller has a FBWC and you are using a RAID configuration that uses striping (RAID 0, 10, 50, or 60), then the full list of stripe sizes is available (8, 16, 32, 64, 128, 256, 512, or 1024 KB). If the controller does not have a FBWC, then the only stripe size available is 64 KB.

SAS HBA (internal HDD/SSD/JBOD support)

Instead of a RAID controller, you can choose the following SAS HBA for internal drive connectivity (non-RAID):

- Cisco 12 Gbps Modular SAS HBA, which plugs into a dedicated RAID controller slot.

SAS HBA (external JBOD support)

In addition to a RAID controller or JBOD controller for internal drives, you can choose the following SAS HBA for external JBOD drive connectivity (non-RAID):

- Cisco 9300-8e 12G SAS HBA (provides 8 SAS ports for external JBOD connectivity).

RAID Volumes and Groups

When creating each RAID volume, follow these guidelines:

- Use the same capacity for each drive in each RAID volume
- For the Cisco 12G SAS modular RAID controller:
  - Use all SAS HDDs in each RAID volume

The number of RAID groups (virtual drives) supported per RAID controller is as follows:

- Cisco 12G SAS Modular RAID controller = 64

Select Controller Options

Select one of the following:

- Cisco 12G SAS modular RAID controller or Cisco 12 Gbps Modular SAS HBA (see *Table 8*), or
- Mixed controllers:
  - One Cisco 12G SAS modular RAID controller or Cisco 12 Gbps Modular SAS HBA and,
  - One or two Cisco 9300-8E 12G SAS HBAs for external SAS JBOD/enclosure connectivity support (see *Table 8*).

NOTE: Mixing the Cisco 9300-8E 12G SAS HBA in the same server as the Cisco 12 Gbps Modular SAS HBA requires the following firmware levels:

- Cisco IMC/BIOS 2.0(8) or later
- Cisco UCS Manager 2.2(6) or later (for integrated servers only)

- Dual HBAs:
  - Two Cisco 9300-8E 12G SAS HBAs for external SAS JBOD/enclosure connectivity support (see *Table 8*).

For the Cisco 12G SAS modular RAID controller, select an appropriate optional RAID configuration listed in *Table 8 on page 23*

NOTE: The Cisco 12G SAS modular RAID controller can be ordered with or without an optional FBWC (cache). The FBWC option backs up the RAID controller write cache. The FBWC is available in 1 GB, 2 GB, or 4 GB sizes. See *Table 8* for details.

NOTE: For all valid combinations of internal/external controller combinations, see **RAID Details, page 69**.

Table 8 Hardware Controller Options

Product ID (PID)	PID Description
RAID Controller for Internal Drives	
Note that if the following Cisco 12G SAS modular RAID controller or Cisco 12Gbps Modular SAS HBA controller is selected, it is factory-installed in the dedicated internal slot.	
UCSC-MRAID12G	Cisco 12G SAS Modular RAID Controller ■ Supports up to 24 internal SAS HDDs and SAS/SATA SSDs (limited to 4 drives in this server) ■ Supports JBOD, RAID 0, 1, 10 (with no FBWC option chosen) and has the ability to also support RAID 5, 6 if a Flash-Backed Write cache upgrade is chosen (shown below in this table) ■ SED drives are compatible with only with the combination of a UCSC-MRAID12G RAID controller along with one of the flash-back write cache modules (UCSC-MRAID12G-1GB, UCSC-MRAID12G-2GB, or UCSC-MRAID12G-4GB). ■ For all self-encrypting drives (SED), standalone Management (CIMC) is supported for configuring and managing local keys (UCSM is not supported). For now, SED drives are managed with local key management only. In the future, third-party key management will be supported.
UCSC-SAS12GHBA	Cisco 12 Gbps Modular SAS HBA ■ Supports up to 24 internal SAS HDDs and SAS/SATA SSDs (limited to 4 drives in this server) ■ Supports JBOD mode only (no RAID functionality. Ideal for SDS (Software Defined Storage) applications. It is also ideal for environments demanding the highest IOPs (for external SSD attach), where a RAID controller can be an I/O bottleneck.
UCSC-PSAS12GHBA[1]	Cisco 12 Gbps Modular SAS HBA ■ Supports up to 24 internal SAS HDDs and SAS/SATA SSDs (limited to 4 drives in this server) ■ Supports JBOD mode only (no RAID functionality. Ideal for SDS (Software Defined Storage) applications. It is also ideal for environments demanding the highest IOPs (for external SSD attach), where a RAID controller can be an I/O bottleneck. ■ Same functionality as UCSC-SAS12GHBA, but vendor is Microsemi
Flash-Backed Write Cache (FBWC) Upgrade Options	
UCSC-MRAID12G-512	512 MB FBWC, which includes a 512 MB memory plus a SuperCap for data cache power backup for the Cisco 12G SAS Modular RAID controller. Supports JBOD and up to RAID 0, 1, 5, and 50.
UCSC-MRAID12G-1GB	1 GB FBWC, which includes a 1 GB MB memory plus a SuperCap for write cache backup. Supports JBOD, RAID 0, 1, 10, 5, 6, 50, and 60.
UCSC-MRAID12G-2GB	2 GB FBWC, which includes a 2 GB MB memory plus a SuperCap for write cache backup. Supports JBOD, RAID 0, 1, 10, 5, 6, 50, and 60.
UCSC-MRAID12G-4GB	4 GB FBWC, which includes a 4 GB MB memory plus a SuperCap for write cache backup. Supports JBOD, RAID 0, 1, 10, 5, 6, 50, and 60.
SAS HBA for External JBOD Attach	
Two SFF8644 mini-SAS HD connectors on this card are accessible at the rear of the chassis.	

Table 8 Hardware Controller Options *(continued)*

Product ID (PID)	PID Description
UCSC-SAS9300-8E	Cisco 9300-8e 12G SAS HBA for external JBOD attach ■ Supports external JBOD using X8 wide SAS ports. **NOTE:** For Cisco SAS 9300-8e 12G SAS HBA external drive enclosure support, see the enclosure section of the compatibility list at the following link: *https://www.broadcom.com/support/interop-compatibility* Customers should contact their storage vendor for technical support related to external JBOD enclosures.
SuperCap Option	
UCSC-MRAID-SC=	Spare SuperCap for Cisco 12G SAS Modular RAID, including all cables. This is a spare SuperCap. It is the exact same SuperCap that ships with the FBWC options listed earlier in this table and can be used as a replacement or upgrade part.
RAID Configuration Options	
R2XX-SRAID0	Enable Single Disk Raid 0 Setting
R2XX-RAID0	Factory preconfigured RAID striping option Enable RAID 0 Setting. Requires a minimum of one hard drive.
R2XX-RAID1	Factory preconfigured RAID mirroring option Enable RAID 1 Setting. Requires exactly two drives with the same size, speed, capacity.
R2XX-RAID5	Factory preconfigured RAID option Enable RAID 5 Setting. Requires a minimum of three drives of the same size, speed, capacity.
R2XX-RAID6	Factory preconfigured RAID option Enable RAID 6 Setting. Requires a minimum of four drives of the same size, speed, capacity.

Notes . . .

1. Supports higher IOPS

NOTE: Although RAID levels 50 and 60 are not orderable from the factory, it is supported for selected controller as shown in *Table 8 on page 23*.

Approved Configurations

- The Cisco 12G SAS Modular RAID controller option supports up to 4 internal drives with up to RAID 0, 1, 10, 5, 6, 50, 60 support (with FBWC option chosen).
- The Cisco 12 Gbps Modular SAS HBA supports up to 4 internal drives with JBOD support.
- The Cisco 9300-8e 12G SAS HBA supports up to 8 external SAS ports with JBOD support.

See *Table 9* for a summary of the supported controller configuration options.

Table 9 Supported Controller Configurations

# CPUs	Cisco 12G SAS Modular RAID Controller or Cisco 12 Gbps Modular SAS HBA[1] (only one can be installed at a time)		Cisco 9300-8E 12G SAS HBA[2]	# Drives Supported	RAID Support	Internal Drive Types Allowed
	Cisco 12G SAS Modular RAID Controller	Cisco 12G Modular SAS HBA				
1	**Installed dedicated slot**	**Installed dedicated slot**	Card absent	4 internal	0,1,10,5,6,50,60 (for 12G SAS) or JBOD (for Modular SAS HBA)	SAS HDDs/ SAS/SATA SSDs
	Only one of the above can be installed at a time					
1	Card absent	Card absent	**Installed slot 1**	0 internal 1024 external	JBOD	None
1	**Installed dedicated slot**	**Installed dedicated slot**	**Installed slot 1**	4 internal 1024 external	0,1,10,5,6,50,60 (for 12G SAS) or JBOD (for Modular SAS HBA) and JBOD (for 9300)	SAS HDDs/ SAS/SATA SSDs
	Only one of the above can be installed at a time					
2	**Installed dedicated slot**	**Installed dedicated slot**	Card absent	4 internal	0,1,10,5,6,50,60 (for 12G SAS) or JBOD (for Modular SAS HBA)	SAS HDDs/ SAS/SATA SSDs
	Only one of the above can be installed at a time					
2	Card absent	Card absent	**Installed any slot**	0 internal 1024 external	JBOD	None

Table 9 Supported Controller Configurations *(continued)*

# CPUs	Cisco 12G SAS Modular RAID Controller or Cisco 12 Gbps Modular SAS HBA[1] (only one can be installed at a time)		Cisco 9300-8E 12G SAS HBA[2]	# Drives Supported	RAID Support	Internal Drive Types Allowed
	Cisco 12G SAS Modular RAID Controller	Cisco 12G Modular SAS HBA				
2	Installed dedicated slot	Installed dedicated slot	Installed slot 1	4 internal 1024 external	0,1,10,5,6,50,60 (for 12G SAS) or JBOD (for Modular SAS HBA) and JBOD (for 9300)	SAS HDDs/ SAS/SATA SSDs
	Only one of the above can be installed at a time					

Notes . . .

1. If you want to boot from a device other than the internal Cisco 12G SAS Modular RAID Controller, you can leave the card installed. Just disable the OPROM for its slot, and the system will boot even with the card installed.
2. External PCIe drive controller card is the Cisco 9300-8e 12G SAS HBA and can be installed simultaneously with the Cisco 12G SAS Modular RAID Controller.

Caveats

- A maximum of two Cisco 9300-8e 12G SAS HBAs can be installed, and they can be installed in any slot (depending on the number of CPUs installed). The system can also support combinations of one Cisco 9300-8e 12G SAS HBA and a Storage Accelerator card along with either a Cisco 12G SAS Modular RAID Controller, or a Cisco 12 Gbps Modular SAS HBA.
- For the Cisco 12G SAS Modular RAID controller, you can choose an optional RAID configuration (up to RAID 0, 1, 10, 5, 6, 50 or 60 if optional FBWC option is chosen), which is preconfigured at the factory. The RAID level you choose must be an available RAID choice for the controller selected. RAID levels 50 and 60 are supported, although they are not available as configuration options. It plugs into an internal RAID controller slot and can be combined with one or two UCS 9300-8e 12G SAS HBAs.

NOTE: For more important information regarding RAID support, see **RAID Details, page 69** and **RAID Option ROM (OPROM) Settings, page 70**.

STEP 6 SELECT HARD DISK DRIVES (HDDs) or SOLID-STATE DRIVES (SSDs)

The standard disk drive features are:

- 3.5-inch large form factor
- Hot-pluggable
- Drives come mounted in sleds

NOTE:
All SED HDDs are FIPs 140-2 compliant
SED SSDs (10X endurance) are FIPS 140-2 compliant
SED SSDs (3X and 1X endurance) are not FIPS 140-2 compliant

Select Drives

The available drives are listed in *Table 10*.

Table 10 Available Hot-Pluggable Sled-Mounted HDDs

Product ID (PID)	PID Description	Drive Type	Capacity
HDDs			
UCS-HD8T7KEM	8 TB 12G SAS 7.2K RPM LFF HDD (512e)	SAS	8 TB
UCS-HD4T7KL12G	4 TB 12G SAS 7.2K RPM LFF HDD	SAS	4 TB
UCS-HD2T7KL12G	2 TB 12G SAS 7.2K RPM LFF HDD	SAS	2 TB
UCS-HD10T7KEM	10 TB 12G SAS 7.2K RPM LFF HDD (512e)	SAS	10 TB
UCS-HD6T7KEM	6 TB 12G SAS 7.2K RPM LFF HDD (512e)	SAS	6 TB
UCS-HD1T7KL12G	1 TB 12G SAS 7.2K RPM LFF HDD	SAS	1 TB
UCS-HD10T7KL4K[1]	10 TB 12G SAS 7.2K RPM LFF HDD (4K)	SAS	10 TB
UCS-HD8T7KL4KHM	8 TB 12G SAS 7.2K RPM LFF HDD (4K)	SAS	8 TB
UCS-HD6T7KL4K[1]	6 TB 12G SAS 7.2K RPM LFF HDD (4K)	SAS	6 TB
UCS-HD12T7KL6GHA	12 TB 6G SATA 7.2K RPM LFF HDD (512e)	SAS	12 TB
UCS-HD2T7KL6GA	2 TB 6G SATA 7.2K RPM LFF HDD	SATA	2 TB
UCS-HD6T12GK9	6 TB 12G SAS 7.2K RPM LFF HDD (512e)	SAS	6 TB
UCS-HD4T7KS3-E	4TB SAS 7.2K RPM LFF HDD	SAS	4 TB
UCS-HD8T7KL6GA	8TB 6G SATA 7.2K RPM LFF HDD	SATA	8 TB
UCS-HD10T7KL6GA	10TB 6G SATA 7.2K RPM LFF HDD	SATA	10 TB
UCS-HD12T7KL4KHM	12 TB 12G SAS 7.2K RPM LFF HDD (4K)	SAS	12 TB
UCS-HD12TB10KHY-E	1.2 TB 3.5 inch 12G SAS 10K RPM HDD	SAS	1.2 TB
UCS-HD600G15KHY-E	600 GB 3.5 inch Hybrid 6G SAS 15K RPM HDD	SAS	600 GB
UCS-HD300G15KHY-E	300 GB 3.5 inch Hybrid 6G SAS 15K RPM HDD	SAS	300 GB

Table 10 Available Hot-Pluggable Sled-Mounted HDDs *(continued)*

Product ID (PID)	PID Description	Drive Type	Capacity
SSDs			
UCS-SD16TG1KHY-EP	1.6TB 3.5 inch Enterprise performance 6G SATA SSD (10X DWPD)	SATA	1.6 TB
UCS-SD400G1KHY-EP	400GB 3.5 inch Enterprise performance 6G SATA SSD (10X DWPD)	SATA	400 GB
UCS-HY480GIS3-EP	480GB 3.5in Enterprise performance 6GSATA SSD(3X endurance) (Intel S4600)	SATA	480 GB
UCS-HY19TIS3-EP	1.9TB 3.5in Enterprise performance 6GSATA SSD(3X endurance) (Intel S4600)	SATA	1.9 TB
UCS-HY16TSAS3-EP	1.6TB 3.5in Enterprise performance 12G SAS SSD (3X DWPD)	SAS	1.6 TB
UCS-HY800GSAS3-EP	800GB 3.5in Enterprise performance 12G SAS SSD (3X DWPD)	SAS	800 GB
UCS-HY400GSAS3-EP	400GB 3.5in Enterprise performance 12G SAS SSD (3X DWPD)	SAS	400 GB

NOTE: Cisco uses solid state drives (SSDs) from a number of vendors. All solid state drives (SSDs) are subject to physical write limits and have varying maximum usage limitation specifications set by the manufacturer. Cisco will not replace any solid state drives (SSDs) that have exceeded any maximum usage specifications set by Cisco or the manufacturer, as determined solely by Cisco

Approved Configurations

(1) Cisco 12G SAS Modular RAID Controller

- If you selected a Cisco 12G SAS Modular RAID controller you have the following options:
  - Cisco 12G SAS Modular RAID controller *with no FBWC option* (supports JBOD, RAID 0, 1, 10)
  - Cisco 12G SAS Modular RAID controller *with FBWC option* (supports JBOD and up to RAID 0, 1, 10, 5, 6, 50, and 60)
  - For either option, select up to 4 SAS HDDs listed in *Table 10*. The Cisco 12G SAS Modular RAID controller does not support SATA HDDs.

(2) Cisco 12 Gbps Modular SAS HBA

- If you selected a Cisco 12 Gbps Modular SAS HBA you have the following option:
  - Select up to 4 HDDs listed in *Table 10*.

See **SELECT RAID CONTROLLERS, page 21** for more details.

Caveats

- You can choose only SAS HDDs when using the Cisco 12G SAS Modular RAID Controller.
- SED drives (see **SELECT SED HARD DISK DRIVES (HDDs) or SOLID-STATE DRIVES (SSDs), page 29**) can be mixed with the non-SED drives in *Table 10 on page 27*.

STEP 7 SELECT SED HARD DISK DRIVES (HDDs) or SOLID-STATE DRIVES (SSDs)

The standard disk drive features are:

- Self-encrypting drives (SED)
- 3.5-inch large form factor
- Hot-pluggable
- Drives come mounted in sleds

NOTE:
All SED HDDs are FIPs 140-2 compliant
SED SSDs (10X endurance) are FIPS 140-2 compliant
SED SSDs (3X and 1X endurance) are not FIPS 140-2 compliant

Select Drives

The available drives are listed in *Table 11*.

Table 11 Available Hot-Pluggable Sled-Mounted Self-Encrypting HDDs and SSDs

Product ID (PID)	PID Description[1]	Drive Type	Capacity
HDDs			
UCS-HD6T12GAK9[2]	6 TB 7.2K RPM LFF HDD (4K sector format, **SED**)	SAS	6 TB
UCS-HD4T12GK9	4 TB 7.2K RPM HDD (**SED**)	SAS	4 TB
UCS-HD600G15CK9	600 GB 12G SAS 15K RPM LFF HDD (**SED**)	SAS	600 GB
SSDs			
UCS-SD800GBCK9	800GB Enterprise performance SAS LFF SSD (10X DWPD, SED)	SAS	800 GB
UCS-SD400GBCK9	400GB Enterprise performance SAS LFF SSD (10X DWPD, SED)	SAS	400 GB

NOTE: Cisco uses solid state drives (SSDs) from a number of vendors. All solid state drives (SSDs) are subject to physical write limits and have varying maximum usage limitation specifications set by the manufacturer. Cisco will not replace any solid state drives (SSDs) that have exceeded any maximum usage specifications set by Cisco or the manufacturer, as determined solely by Cisco

Notes . . .

1. For all self-encrypting drives (SED), standalone Management (CIMC) is supported for configuring and managing local keys (UCSM is not supported). For now, SED drives are managed with local key management only. In the future, third-party key management will be supported. Also, 4K sector format drives do not support Vmware and require UEFI boot.

2. UCS Rack Servers require minimum firmware version 2.0(4) to support 4K sector size drives. Operating Systems supported on 4k sector size drives is as follows:

- Windows: Win2012 and Win2012R2
- Linux: RHEL 6.5/6.6/6.7/7.0/7.2/SLES 11 SP3 and SLES 12
- VMware supports 4k native drives starting from ESXi 6.7; All earlier versions of ESXi support 512e format drives only

UEFI Mode must be used when booting from 4K sector size drives, legacy mode is not supported.
Ensure that 4K sector size and 512 byte sector size drives are not mixed in the same RAID volume.

Approved Configurations

(1) Cisco 12G SAS Modular RAID Controller

- If you selected a Cisco 12G SAS Modular RAID controller you have the following options:
  - Cisco 12G SAS Modular RAID controller *with FBWC option* (supports JBOD and up to RAID 0, 1, 10, 5, 6, 50, and 60)
  - Select up to 4 SAS HDDs listed in *Table 10*. The Cisco 12G SAS Modular RAID controller does not support SATA HDDs.

See **SELECT RAID CONTROLLERS, page 21** for more details.

Caveats

- You can choose only SAS HDDs when using the Cisco 12G SAS Modular RAID Controller.
- Non-SED drives (see **SELECT HARD DISK DRIVES (HDDs) or SOLID-STATE DRIVES (SSDs), page 27**) can be mixed with the SED drives in *Table 11 on page 29*.
- SED drives are compatible with only with the combination of a UCSC-MRAID12G RAID controller along with one of the flash-back write cache modules:
  - UCSC-MRAID12G-1GB, or
  - UCSC-MRAID12G-2GB, or
  - UCSC-MRAID12G-4GB

STEP 8 SELECT PCIe OPTION CARD(s)

The standard PCIe card offerings are:

- Modular LAN on Motherboard (mLOM)
- Virtual Interface Cards (VICs)
- Network Interface Cards (NICs)
- Converged Network Adapters (CNAs)
- Host Bus Adapters (HBAs)
- UCS Storage Accelerators

Select PCIe Option Cards

The available PCIe option cards are listed in *Table 12*.

Table 12 Available PCIe Option Cards

Product ID (PID)	PID Description	Card Height
Modular LAN on Motherboard (mLOM)[1]		
UCSC-MLOM-C10T-02	Cisco UCS VIC1227T VIC MLOM - Dual Port 10GBaseT	N/A
UCSC-MLOM-CSC-02	Cisco UCS VIC1227 VIC MLOM - Dual Port 10Gb SFP+	N/A
UCSC-MLOM-IRJ45	Intel i350 quad-port MLOM NIC	N/A
UCSC-MLOM-C40Q-03	Cisco VIC 1387 Dual Port 40Gb QSFP CNA MLOM	N/A
Virtual Interface Cards (VICs)		
UCSC-PCIE-CSC-02	Cisco VIC 1225 Dual Port 10Gb SFP+ CNA	Half
UCSC-PCIE-C10T-02	Cisco VIC 1225T Dual Port 10GBaseT CNA	Half
UCSC-PCIE-C40Q-03	Cisco VIC 1385 Dual Port 40Gb QSFP+ CNA w/RDMA	Half
Network Interface Cards (NICs)		
1 Gb NICs		
N2XX-ABPCI03-M3	Broadcom 5709 Quad Port 1Gb w/TOE iSCSI for M3 Servers	Half
N2XX-ABPCI01-M3	Broadcom 5709 Dual-Port Ethernet PCIe Adapter M3 & later	Half
UCSC-PCIE-IRJ45	Intel i350 Quad Port 1Gb Adapter	Half
10 Gb NICs		
N2XX-AIPCI01[2]	Intel X520 Dual Port 10Gb SFP+ Adapter	Half
UCSC-PCIE-ITG	Intel X540 Dual Port 10GBase-T Adapter	Half
UCSC-PCIE-QNICBT	QLogic QLE8442 dual-port 10Gbase-T NIC	Half
UCSC-PCIE-QNICSFP	QLogic QLE8442 dual-port 10G SFP+ NIC	Half

Table 12 Available PCIe Option Cards *(continued)*

Product ID (PID)	PID Description	Card Height
UCSC-PCIE-ID10GC	Intel X550-T2 dual-port 10GBase-T NIC	Half
UCSC-PCIE-ID10GF	Intel X710-DA2 dual-port 10G SFP+ NIC	Half
UCSC-PCIE-IQ10GF	Intel X710 quad-port 10G SFP+ NIC	Full
UCSC-PCIE-ID40GF	Intel XL710 dual-port 40G QSFP+ NIC	Half
10 Gb Converged Network Adapters (CNAs)		
UCSC-PCIE-E14102	Emulex OCe14102-UX dual-port 10 GbE FCoE CNA	Half
UCSC-PCIE-Q8362	Qlogic QLE8362 dual-port 10 GbE FCoE CNA	Half
UCSC-PCIE-E14102B	Emulex OCe14102B-UX dual-port 10G SFP+ with iSCSI, FCoE CNA	Half
Host Bus Adapters (HBAs)		
UCSC-PCIE-BS32GF	Broadcom LPe32000 Single-Port 32G FC HBA	Half
UCSC-PCIE-BD32GF	Broadcom LPe32002 Dual-Port 32G FC HBA	Half
UCSC-PCIE-QD32GF	Qlogic QLE2742 dual-port 32G FC HBA	Half
N2XX-AQPCI05	Qlogic QLE2562 Dual Port 8Gb Fibre Channel HBA	Half
UCSC-PCIE-Q2672	Qlogic QLE2672-CSC, 16Gb Fibre Channel HBA with SR Optics	Half
N2XX-AEPCI05	Emulex LPe 12002 Dual Port 8Gb Fibre Channel HBA	Half
UCSC-PCIE-E16002	Emulex LPe16002-M6, 16Gb Fibre Channel HBA with SR Optics	Half
UCS Storage Accelerators[3]		
UCSC-F-S13002	UCS Rack PCIe Storage 1300 GB SanDisk SX350 Medium Endurance	Half
UCSC-F-S16002	UCS Rack PCIe Storage 1600 GB SanDisk SX350 Medium Endurance	Half
UCSC-F-S32002	UCS Rack PCIe Storage 3200 GB SanDisk SX350 Medium Endurance	Half
UCSC-F-S64002	UCS Rack PCIe Storage 6400 GB SanDisk SX350 Medium Endurance	Full
UCS NVMe/PCIe Add in Cards		
UCSC-F-H38001	3.8 TB NVMe/PCIe storage (HGST SN150) Read Intensive	Half
UCSC-NVME-H64003	Cisco HHHL AIC 6.4T HGST SN260 NVMe Extreme Perf High Endrnc	HHHL*
UCSC-NVME-H76801	Cisco HHHL 7.7T HGST SN260 NVMe Extreme Perf Value Endurance	HHHL*
UCSC-NVME-H32003	Cisco HHHL AIC 3.2T HGST SN260 NVMe Extreme Perf High Endrnce	HHHL*
*HHHL= Half Height Half Length		

Notes . . .

1. The mLOM cards do not plug into any of the riser 1 or riser 2 card slots; instead, they plug into a dedicated connector inside the server chassis.
2. The Intel X520 supports the following Cisco PIDs: UCS-SFP-1WLR and UCS-SFP-1WSR SFPs. Refer to the Intel X520 product brief for a full list of supported optics and cables
3. A maximum of two storage accelerator cards are supported if they are half height; the supported number of full height cards is one.

Approved Configurations

(1) 1-CPU Systems

- You can select up to one PCIe option card (slot 1 for 1-CPU systems) listed in *Table 12*.

(2) 2-CPU Systems

- You can select up to two PCIe option cards (slots 1 and 2 for 2-CPU systems) listed in *Table 12*.

Caveats

- A maximum of two storage accelerator cards are supported if they are half height; the supported number of full height cards is one.
- For 1-CPU systems:
  - Only the full-height PCIe slot on riser 1 (slot 1) is supported
  - Only a single PCIe VIC card is supported and must be installed in slot 1 (the full-height slot). However, in addition to the one PCIe VIC card, you can also choose to install an mLOM VIC card.
  - If any of the Storage Accelerator cards are installed, they can be installed only in slot 1.
- For 2-CPU systems:
  - Both PCIe slots (slots 1 and 2) are supported
  - Two plug-in PCIe VIC cards can be installed in 2-CPU systems, using slots 1 and 2. In addition, you can order an mLOM VIC card, which is installed in the mLOM slot inside the chassis and thus have three VIC cards in operation at the same time. See *Table 12 on page 31* for the selection of plug-in and mLOM VIC cards. See also *Table 1 on page 6*.
  - If any of the Storage Accelerator cards are installed, they can be installed only in slot 1.
- Other considerations for the Cisco VIC 1225/1225/1227/1227T/1385 cards:
  - VIC 1225 and VIC 1227/1227T support 10G SFP+ optical and copper twinax connections
  - VIC 1225T Supports RJ45 Category 6 or better twisted pair cable connections
  - VIC 1385 supports a 4x10 Gbps QSFP to SFP breakout fiber cable.
  - The server supports installation of two PCIe Cisco VIC 1225/1225T/1385 cards and they are supported in PCIe slots 1 and 2. Slot 1 is the primary slot for UCSM integration and for Cisco card NIC mode.
  - The server supports up to two PCIe Cisco VICs (1225, 1225T, 1385) plus an MLOM VIC (1227, 1227T), however, single wire management is supported on only one VIC at a time. If multiple VICs are installed on a server, only one slot has NCSI enabled at a time and for single wire management, priority goes to the MLOM slot, then slot 1, then slot 2 for NCSI management traffic. When multiple cards are installed, connect the single wire management cables in the priority order mentioned above.

- For the Cisco UCS VIC1225, requires that the server has CIMC firmware version 1.4(6) or later installed and VIC firmware of 2.1(0) or later. For the Cisco UCS VIC1225T, requires that the server has CIMC firmware version 1.5(1) or later installed and VIC firmware of 2.1(1) or later.
- The VIC features mentioned in this section are supported with the following software releases: 2.0.6 (CIMC) and 2.2.5a (UCSM).

■ To help ensure that your operating system is compatible with the card you have selected, check the Hardware Compatibility List at this URL:

http://www.cisco.com/en/US/products/ps10477/prod_technical_reference_list.html

STEP 9 ORDER OPTIONAL NETWORK CARD ACCESSORIES

Copper twinax cables and SFP optical modules may be ordered to support the two-port network cards that are available with the server.

Choose Optional Twinax Cables

Table 13 lists the copper twinax cables available for the PCIe cards. You can choose cable lengths of 1, 3, 5, 7, or 10 meters. The two longer cables (7 and 10 meters) are active, which means that they contain active components within the SFP+ housing to improve signal quality.

Table 13 Available Twinax Cables

Product ID (PID)	PID Description
SFP-H10GB-CU1M	10GBASE-CU SFP+ Cable (1 M)
SFP-H10GB-CU3M	10GBASE-CU SFP+ Cable (3 M)
SFP-H10GB-CU5M	10GBASE-CU SFP+ Cable (5 M)

Approved Configurations

(1) Choose Up to Two Twinax Cables for Each Network Card Ordered

- You may choose one or two twinax cables for each compatible PCIe network card ordered. The cables can be different lengths; however, you would normally order two cables of equal lengths to connect to the primary and redundant network switching equipment.

Choose Optional SFP Modules

Optical Cisco SFP+ modules are listed in *Table 14*.

Table 14 Available SFP Modules

Product ID (PID)	PID Description
SFP-10G-SR	10GBASE-SR SFP+ Module 850 nm, multimode, SR, 3.3V, LC connector, with Digital Optical Monitoring
SFP-10G-LR	10GBASE-LR SFP+ Module 1310 nm, single mode, LR, 3.3 V, with Digital Optical Monitoring
DS-SFP-FC8G-SW	8 Gbit SFP+ Module 850 nm, multimode, SR, 3.3V, LC connector, with Digital Optical Monitoring

NOTE: The Intel X520 NIC supports the following Cisco PIDs: UCS-SFP-1WLR and UCS-SFP-1WSR SFPs. Refer to the Intel X520 product brief for a full list of supported optics and cables.

Approved Configurations

(1) Choose Up to Two SFP+ Modules for Each Network Card Ordered

- You may choose one or two SFP+ optical modules cables for each compatible PCIe network card ordered. You would normally order two modules for connecting to the primary and redundant network switching equipment. With the SFP+ optical modules, you can use common fiber optic cables, widely available.

See the *Figure 5 on page 39* for typical SFP+ and twinax connections to the network cards.

Caveats

Check the table on the following page for compatibility between the PCIe network cards and SFPs or twinax cables.

NOTE: The table shows all PCIe network cards for all C-series servers. Not all of the cards shown in the table are supported in this server. The intent of the table is to show compatibility between cards and twinax cables or SFPs.

Table 15 PCIe Card Compatibility

PCIe Cards	Twinax Cables	Cisco SFP Modules		
		SFP-10G-SR	SFP-10G-LR	DS-SFP-FC8G-SW
Converged Network Adapters (CNAs)				
UCSC-PCIE-BSFP (Broadcom 57712 Dual Port 10Gb SFP+ w/TOE iSCSI)	Yes	Yes	No	
UCSC-PCIE-CSC-02 (Cisco VIC 1225 Dual Port 10Gb SFP+ CNA)	Yes	Yes	Yes	No
UCSC-PCIE-C10T-02 (Cisco VIC 1225T Dual Port 10GBaseT CNA)	No	No	No	No
UCSC-MLOM-CSC-02 (Cisco UCS VIC1227 VIC MLOM - Dual Port 10Gb SFP+)	Yes	Yes	Yes	No
UCSC-MLOM-C10T-02 (Cisco UCS VIC1227T VIC MLOM - Dual Port 10GBaseT)	No	No	No	No
UCSC-PCIE-C40Q-02 (Cisco VIC 1285 Dual Port 40Gb QSFP CNA)	Yes	No[1]	No	
UCSC-PCIE-C40Q-03 (Cisco VIC 1385 Dual Port 40Gb QSFP+ CNA w/RDMA)	Yes	No[1]	No	
UCSC-PCIE-ESFP (Emulex OCe11102-FX dual-port 10 GbE FCoE CNA (Gen 3 CNA))	Yes	Yes	No	
UCSC-PCIE-QSFP (QLogic QLE8242-CU dual-port 10 GbE FCoE CNA)	Yes	Use Qlogic SFP		
UCSC-PCIE-B3SFP (Broadcom 57810 10Gb A-FEX SFP+	Yes	Yes	No	
UCSC-PCIE-Q8362 (Qlogic QLE8362 dual-port 10 GbE FCoE CNA)	Yes	Use Qlogic SFP		
UCSC-PCIE-E14102 (Emulex OCe14102-UX dual-port 10 GbE FCoE CNA)	Yes	Yes	No	
Network Interface Cards (NICs)				
N2XX-ABPCI01-M3 (Broadcom 5709 Dual-Port Ethernet PCIe Adapter for M3 Servers)	Use RJ45 Ethernet cable			
N2XX-ABPCI03-M3 (Broadcom 5709 Quad Port 10/100/1Gb NIC w/TOE iSCSI for M3 Servers	Use RJ45 Ethernet cable			
N2XX-AIPCI01 (Intel X520 Dual Port 10Gb SFP+ Adapter)	Yes	Use Intel SFP UCS-SFP-1WLR or UCS-SFP-1WSR		
UCSC-PCIE-ITG (Intel X540 Dual Port 10GBase-T Adapter)	Use RJ45 Ethernet cable			
UCSC-PCIE-IRJ45 (Intel i350 Quad Port 1Gb Adapter	Use RJ45 Ethernet cable			

Table 15 PCIe Card Compatibility *(continued)*

PCIe Cards	Twinax Cables	Cisco SFP Modules		
		SFP-10G-SR	SFP-10G-LR	DS-SFP-FC8G-SW
UCSC-PCIE-BTG (Broadcom 57712 Dual Port 10GBASE-T w/TOE iSCSI)	Yes	No	No	
Host Bus Adapters (HBAs)				
N2XX-AEPCI03 (Emulex LPe 11002 Dual Port 4Gb Fibre Channel HBA	No	Preinstalled - do not change SFP		
N2XX-AEPCI05 (Emulex LPe 12002 Dual Port 8Gb Fibre Channel HBA)	No	Preinstalled - do not change SFP		
N2XX-AQPCI03 (QLogic QLE2462 Dual Port 4Gb Fibre Channel HBA)	No	Preinstalled - do not change SFP		
N2XX-AQPCI05 (QLogic QLE2562 Dual Port 8Gb Fibre Channel HBA)	No	Preinstalled - do not change SFP		
UCSC-PCIE-Q2672 (Qlogic QLE2672-CSC, 16Gb Fibre Channel HBA with SR Optics)	No	Preinstalled - do not change SFP		
UCSC-PCIE-E16002 (Emulex LPe16002-M6, 16Gb Fibre Channel HBA with SR Optics)	No	Preinstalled - do not change SFP		

Notes . . .

1. This card supports a 4x10 Gbps QSFP to SFP breakout fiber cable.

Figure 5 Network Card Connections

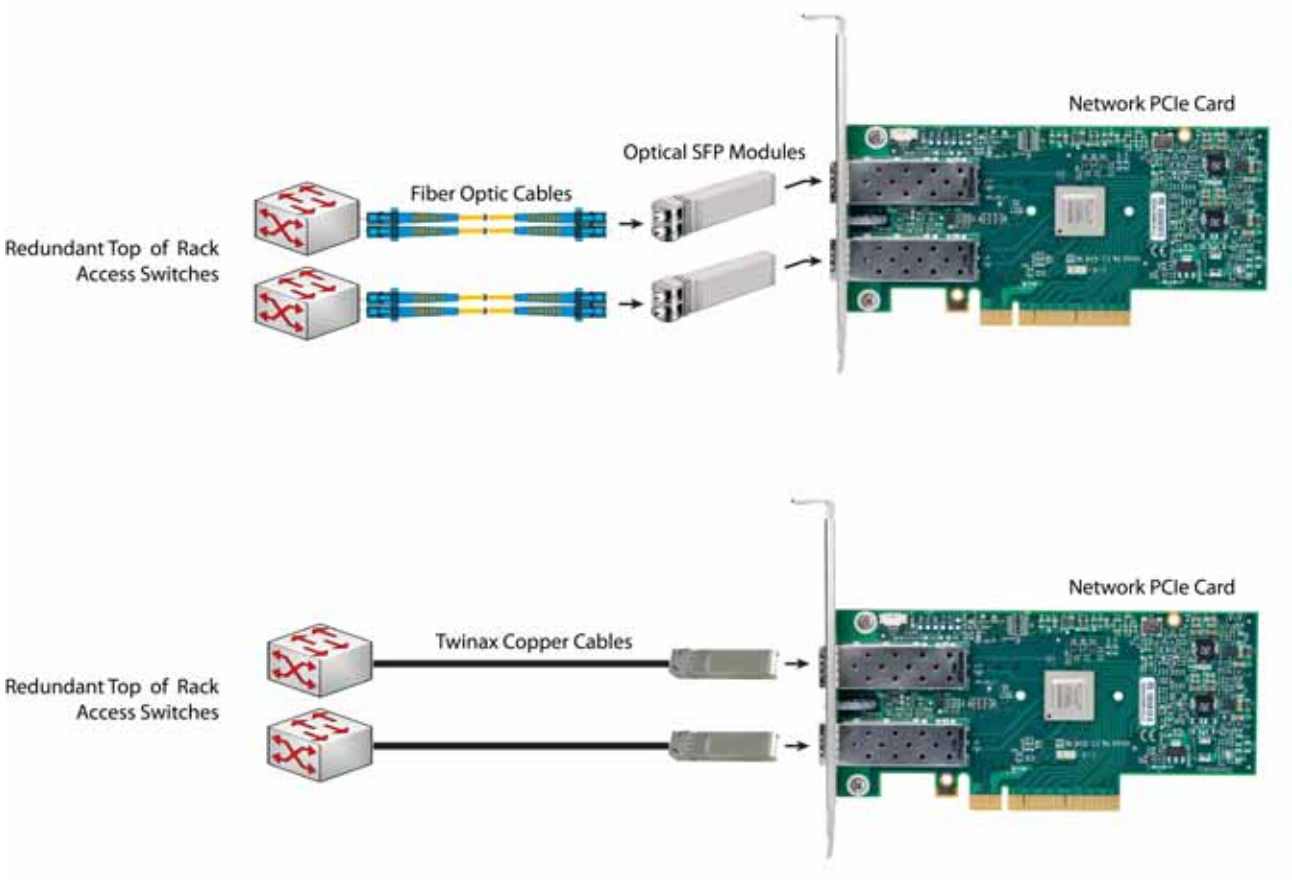

STEP 10 ORDER POWER SUPPLY

The C220 M4 LFF server accommodates two power supplies. A lightly loaded server can operate from one 770 W AC power supply or one 1050 W DC power supply. A fully loaded server might need to be powered with two 770 W power supplies (see *Table 16*).

Use the power calculator at the following link to determine the needed power based on the options chosen (CPUs, drives, memory, and so on):

http://ucspowercalc.cisco.com

Table 16 Power Supply PIDs

Product ID (PID)	PID Description
UCSC-PSU1-770W	770 W power supply
UCSC-PSUV2-1050DC	1050W V2 -48 VDC Power Supply for C220 M4 C-Series Server

NOTE: In a two power supply server, both power supplies must be identical.

STEP 11 SELECT AC POWER CORD(s)

Using *Table 17*, select the appropriate AC power cords. You can select a minimum of no power cords and a maximum of two. If you select the option R2XX-DMYMPWRCORD, no power cord is shipped with the server.

Table 17 Available Power Cords

Product ID (PID)	PID Description	Images
R2XX-DMYMPWRCORD	No power cord (dummy PID to allow for a no power cord option)	Not applicable
CAB-N5K6A-NA	Power Cord, 200/240V 6A, North America	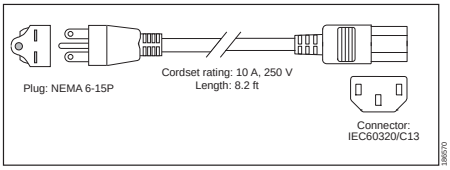
CAB-AC-L620-C13	AC Power Cord, NEMA L6-20 - C13, 2M/6.5ft	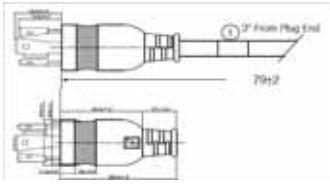
CAB-C13-CBN	CABASY,WIRE,JUMPER CORD, 27" L, C13/C14, 10A/250V	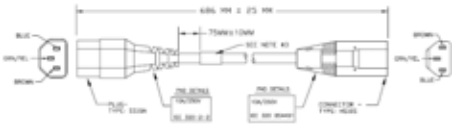
CAB-C13-C14-2M	CABASY,WIRE,JUMPER CORD, PWR, 2 Meter, C13/C14,10A/250V	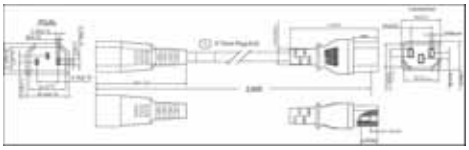
CAB-C13-C14-AC	CORD,PWR,JMP,IEC60320/C14,IEC60320/C13, 3.0M	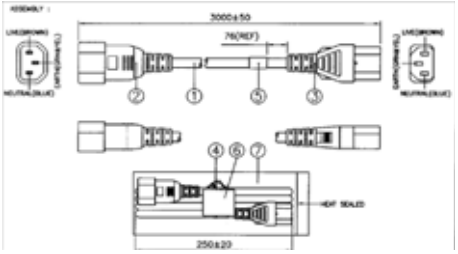

Table 17 Available Power Cords

Product ID (PID)	PID Description	Images
CAB-250V-10A-AR	Power Cord, 250V, 10A, Argentina	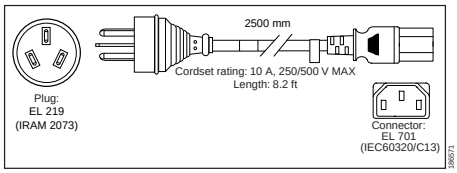
CAB-9K10A-AU	Power Cord, 250VAC 10A 3112 Plug, Australia	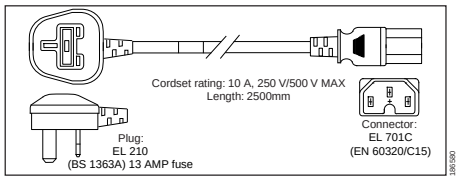
SFS-250V-10A-CN	Power Cord, SFS, 250V, 10A, China	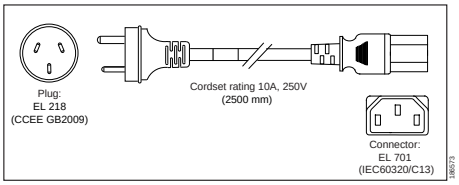
CAB-250V-10A-CN	AC Power Cord - 250V, 10A - PRC	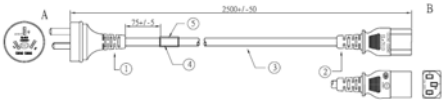
CAB-9K10A-EU	Power Cord, 250VAC 10A CEE 7/7 Plug, EU	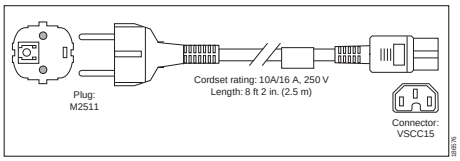
SFS-250V-10A-ID	Power Cord, SFS, 250V, 10A, India	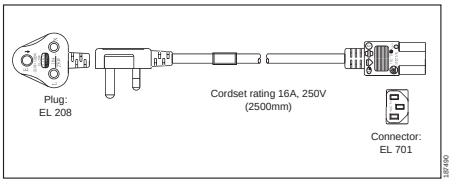
SFS-250V-10A-IS	Power Cord, SFS, 250V, 10A, Israel	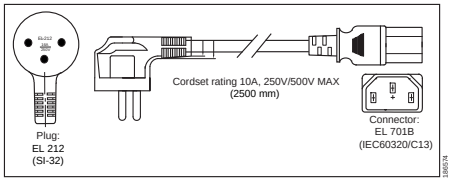

Table 17 Available Power Cords

Product ID (PID)	PID Description	Images
CAB-9K10A-IT	Power Cord, 250VAC 10A CEI 23-16/VII Plug, Italy	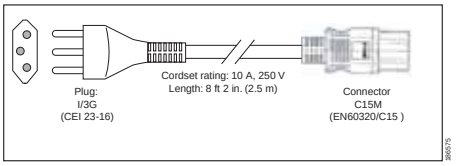
CAB-9K10A-SW	Power Cord, 250VAC 10A MP232 Plug, Switzerland	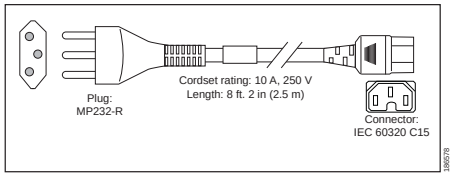
CAB-9K10A-UK	Power Cord, 250VAC 10A BS1363 Plug (13 A fuse), UK	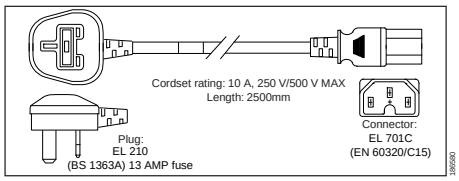
CAB-9K12A-NA	Power Cord, 125VAC 13A NEMA 5-15 Plug, North America	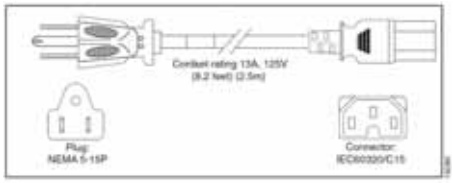
CAB-250V-10A-BR	Power Cord - 250V, 10A - Brazil	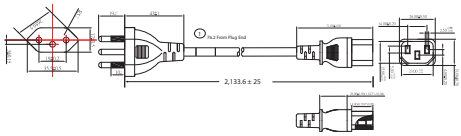
CAB-48DC-40A-8AWG	Power Cord for -48VDC PSU, 3.5M, 3 Wire, 8AWG, 4	Image not available
CAB-JPN-3PIN	Power Cord 3PIN, Japan	Image not available
CAB-JPN-3PIN	Power Cord 3PIN, Japan	Image not available
CAB-C19-C20-3M-JP	Power Cord C19-C20, 3M/10ft Japan PSE mark	Image not available

STEP 12 ORDER TOOL-LESS RAIL KIT AND OPTIONAL REVERSIBLE CABLE MANAGEMENT ARM

Select a Tool-Less Rail Kit

Select a tool-less rail kit from *Table 18*.

Table 18 Tool-Less Rail Kit Options

Product ID (PID)	PID Description
UCSC-RAILF-M4	Friction Rail Kit for C220 M4 Servers
UCSC-RAILB-M4	Ball Bearing Rail Kit for C220 M4 and C240 M4 Servers

Select an Optional Reversible Cable Management Arm

The reversible cable management arm mounts on either the right or left slide rails at the rear of the server and is used for cable management. Use *Table 19* to order a cable management arm.

Table 19 Cable Management Arm

Product ID (PID)	PID Description
UCSC-CMAF-M4	Reversible CMA for C220 M4 tool-less friction and ball bearing rail kit

For more information about the tool-less rail kit and cable management arm, see the *Cisco UCS C220 M4 Installation and Service Guide* at this URL:

http://www.cisco.com/c/en/us/td/docs/unified_computing/ucs/c/hw/C220M4/install/C220M4.html

NOTE: If you plan to rackmount your UCS C220 M4 server, you must order a tool-less tool-less rail kits.

STEP 13 SELECT NIC MODE (OPTIONAL)

By default, the C220 M4 server NIC mode is configured to be Shared LOM Extended. This NIC mode allows any LOM port or adapter card port to be used to access the Cisco Integrated Management Controller (CIMC). The Cisco VIC card must be installed in a slot with NCSI support.

To change the default NIC mode to Dedicated, select the UCSC-DLOM-01 PID shown in *Table 20*. In Dedicated NIC mode, the CIMC can be accessed only through the dedicated management port. See **Chassis Rear View, page 5** for the location of the management port.

To change the default NIC mode to Cisco Card Mode, select the UCSC-CCARD-01 PID shown in *Table 20*. In this mode, you can assign an IP address to the CIMC using DHCP and from there you can fully automate your deployment.

For more details on all the NIC mode settings, see

http://www.cisco.com/c/en/us/td/docs/unified_computing/ucs/c/sw/gui/config/guide/2-0/b_Cisco_UCS_C-series_GUI_Configuration_Guide_201.pdf

Table 20 Dedicated NIC Mode Ordering Information

Product ID (PID)	PID Description
UCSC-DLOM-01	Dedicated Mode BIOS setting for C-Series Servers
UCSC-CCARD-01	Cisco Card Mode BIOS setting for C-Series Servers

STEP 14 ORDER A TRUSTED PLATFORM MODULE (OPTIONAL)

Trusted Platform Module (TPM) is a computer chip (microcontroller) that can securely store artifacts used to authenticate the platform (server). These artifacts can include passwords, certificates, or encryption keys. A TPM can also be used to store platform measurements that help ensure that the platform remains trustworthy. Authentication (ensuring that the platform can prove that it is what it claims to be) and attestation (a process helping to prove that a platform is trustworthy and has not been breached) are necessary steps to ensure safer computing in all environments.

The TPM ordering information is listed in *Table 21*.

Table 21 Trusted Platform Module

Product ID (PID)	PID Description
UCSX-TPM2-001	Trusted Platform Module 1.2 SPI-based for UCS Servers
UCSX-TPM2-002	Trusted Platform Module 2.0 for UCS servers

NOTE: The TPM module used in this system conforms to TPM v1.2 and 2.0, as defined by the Trusted Computing Group (TCG). It is also SPI-based.

NOTE: TPM installation is supported after-factory. However, a TPM installs with a one-way screw and cannot be replaced, upgraded, or moved to another server. If a server with a TPM is returned, the replacement server must be ordered with a new TPM. If there is no existing TPM in the server, you can install TPM 2.0. You must first upgrade to UCS firmware that supports Intel E5-2600 v4 CPUs, which is Cisco UCS Manager Release 2.2(7) and later or Release 3.1(1) and later (because Cisco aligned support for TPM 2.0 with these CPUs).

CAUTION: If the Cisco UCS server (with Intel E5-2600 v4 or v3 CPUs) is running UCS firmware that added support for Intel E5-2600 v4 CPUs, then it will work with TPM version 2.0. However, if you downgrade the firmware and BIOS to a version earlier than Release 2.2(7) or earlier than Release 3.1(1), then you are vulnerable to a potential security exposure. See the following support matrix for TPM versions.

.

Table 22 TPM Support Matrix by Intel CPU Version

Intel CPU	TPM Version	Minimum UCS Manager (UCSM) Version
Intel E5-2600 v3	TPM 1.2	Release 2.2(3)
	TPM 2.0	Release 2.2(7) or Release 3.1(1)
Intel E5-2600 v4	TPM 1.2	Release 2.2(7) or Release 3.1(1)
	TPM 2.0	Release 2.2(7) or Release 3.1(1)

STEP 15 ORDER CISCO FLEXIBLE FLASH SD CARD MODULE (OPTIONAL)

You can order 128 GB, 64 GB, or 32 GB SD cards. See *Figure 6 on page 61* for the location of the SD cards. There are two locations, SD1 and SD2.

Table 23 64 GB Secure Digital (SD) Card (blank)

Product ID (PID)	PID Description
UCS-SD-128G	128 GB SD Card for UCS Servers
UCS-SD-64G-S	64 GB SD Card for UCS Servers
UCS-SD-32G-S	32 GB SD Card for UCS Servers

Caveats

- Install either one or two 64, or 32 GB SD cards
- Do not mix SD card sizes

STEP 16 ORDER OPTIONAL USB 3.0 DRIVE

You can order one optional USB 3.0 drive. The USB drive ordering information is listed in *Table 24*.

Table 24 USB 3.0 Drive

Product ID (PID)	PID Description
UCS-USBFLSHB-16GB	UCS Servers 16 GB Flash USB Drive

See *Figure 6 on page 61* for the location of the USB connector

STEP 17 SELECT OPERATING SYSTEM AND VALUE-ADDED SOFTWARE

Several software programs are available. Select as desired from *Table 25*.

Table 25 Software (for 2-CPU servers)

PID Description	Product ID (PID)
Cisco One	
C1F2PUCSK9	Cisco ONE Foundation Perpetual UCS
C1A1PUCSK9	Cisco ONE Enterprise Cloud Perpetual UCS
C1UCS-OPT-OUT	Cisco One Data Center Compute Opt Out Option
Energy Management (JouleX)	
CEM-DC-PER	Perpetual License Key for Cisco Energy Management for DC
UCS Director	
CUIC-PHY-SERV-BM-U	Cisco UCS Director Resource Lic - 1 Phy Sevr node bare metal
CUIC-PHY-SERV-U	Cisco UCS Director Resource Lic - One physical Server node
CUIC-TERM	Acceptance of Cisco UCS Director License Terms
UCS Performance Manager	
UCS-PM-IE	UCS Performance Manager
UCS-PM-EE	UCS Performance Manager Express
EVAL-UCS-PM-IE	UCS Performance Manager - 90 days evaluation
EVAL-UCS-PM-EE	UCS Performance Manager Express - 90 days evaluation
Nexus 1000V for Hyper-V and vSphere	
N1K-VSG-UCS-BUN	Nexus 1000V Adv Edition for vSphere Paper License Qty 1
IMC Supervisor	
CIMC-SUP-B10	IMC Supervisor- Branch Mgt SW for C & E-Series up to 1K Svrs
CIMC-SUP-B02	IMC Supervisor- Branch Mgt SW for C & E-Series up to 250 Svrs
UCS Multi-Domain Manager	
UCS-MDMGR-100S	UCS Multi-Domain Manager (Central) Per Server License (100+)
UCS-MDMGR-50S	UCS Multi-Domain Manager (Central) Per Server License (50+)
UCS-MDMGR-1S	UCS Multi-Domain Manager (Central) Per Server License
UCS-MDMGR-10S	UCS Multi-Domain Manager (Central) Per Server License (10+)
UCS-MDMGR-1DMN	UCS Multi-Domain Manager (Central) Per Domain License
VMware vCenter	
VMW-VCS-STD-1A	VMware vCenter 6 Server Standard, 1 yr support required
VMW-VCS-STD-3A	VMware vCenter 6 Server Standard, 3 yr support required
VMW-VCS-STD-5A	VMware vCenter 6 Server Standard, 5 yr support required
VMW-VCS-FND-1A	VMware vCenter 6 Server Foundation (3 Host), 1 yr supp reqd
VMW-VCS-FND-3A	VMware vCenter 6 Server Foundation (3 Host), 3 yr supp reqd
VMW-VCS-FND-5A	VMware vCenter 6 Server Foundation (3 Host), 5 yr supp reqd
Microsoft Windows Server	
MSWS-12R2-DC2S	Windows Server 2012 R2 Datacenter (2 CPU/Unlimited VMs)

Table 25 Software (for 2-CPU servers) *(continued)*

PID Description	Product ID (PID)
MSWS-12-ST2S	Windows Server 2012 Standard (2 CPU/2 VMs)
MSWS-12-DC2S	Windows Server 2012 Datacenter (2 CPU/Unlimited VMs)
MSWS-12-ST2S-NS	Windows Server 2012 Standard (2 CPU/2 VMs) No Cisco SVC
MSWS-12R2-DC2S-NS	Windows Server 2012 R2 Datacen (2 CPU/Unlim VM) No Cisco Svc
MSWS-12R2-ST2S	Windows Server 2012 R2 Standard (2 CPU/2 VMs)
MSWS-12-DC2S-NS	Windows Server 2012 Datacenter (2 CPU/Unlim VM) No Cisco Svc
MSWS-12R2-ST2S-NS	Windows Server 2012 R2 Standard (2 CPU/2 VMs) No Cisco SVC
MSWS-19-DC16C	Windows Server 2019 Data Center (16 Cores/Unlimited VMs)
MSWS-19-DC16C-NS	Windows Server 2019 DC (16 Cores/Unlim VMs) - No Cisco SVC
MSWS-19-DC16C-RM	Windows Server 2019 DC (16Cores/Unlim VM) Rec Media DVD Only
MSWS-19-DCA2C	Windows Server 2019 Data Center - Additional 2 Cores
MSWS-19-DCA2C-NS	Windows Server 2019 DC - Additional 2 Cores - No Cisco SVC
MSWS-19-ST16C	Windows Server 2019 Standard (16 Cores/2 VMs)
MSWS-19-ST16C-NS	Windows Server 2019 Standard (16 Cores/2 VMs) - No Cisco SVC
MSWS-19-ST16C-RM	Windows Server 2019 Stan (16 Cores/2 VMs) Rec Media DVD Only
MSWS-19-STA2C	Windows Server 2019 Standard - Additional 2 Cores
MSWS-19-STA2C-NS	Windows Server 2019 Stan - Additional 2 Cores - No Cisco SVC
MSWS-19-DC16C	Windows Server 2019 Data Center (16 Cores/Unlimited VMs)
MSWS-19-DC16C-NS	Windows Server 2019 DC (16 Cores/Unlim VMs) - No Cisco SVC
MSWS-19-DC16C-RM	Windows Server 2019 DC (16Cores/Unlim VM) Rec Media DVD Only
MSWS-19-DCA2C	Windows Server 2019 Data Center - Additional 2 Cores
MSWS-19-DCA2C-NS	Windows Server 2019 DC - Additional 2 Cores - No Cisco SVC
MSWS-19-ST16C	Windows Server 2019 Standard (16 Cores/2 VMs)
MSWS-19-ST16C-NS	Windows Server 2019 Standard (16 Cores/2 VMs) - No Cisco SVC
MSWS-19-ST16C-RM	Windows Server 2019 Stan (16 Cores/2 VMs) Rec Media DVD Only
MSWS-19-STA2C	Windows Server 2019 Standard - Additional 2 Cores
MSWS-19-STA2C-NS	Windows Server 2019 Stan - Additional 2 Cores - No Cisco SVC
Red Hat	
RHEL-2S2V-3A	Red Hat Enterprise Linux (1-2 CPU,1-2 VN); 3-Yr Support Req
RHEL-2S2V-1A	Red Hat Enterprise Linux (1-2 CPU,1-2 VN); 1-Yr Support Req
VMware	
VMW-VSP-EPL-5A	VMware vSphere 6 Ent Plus (1 CPU), 5-yr, Support Required
VMW-VSP-STD-1A	VMware vSphere 6 Standard (1 CPU), 1-yr, Support Required
VMW-VSP-STD-3A	VMware vSphere 6 Standard (1 CPU), 3-yr, Support Required
VMW-VSP-EPL-3A	VMware vSphere 6 Ent Plus (1 CPU), 3-yr, Support Required
VMW-VSP-EPL-1A	VMware vSphere 6 Ent Plus (1 CPU), 1-yr, Support Required
VMW-VSP-STD-5A	VMware vSphere 6 Standard (1 CPU), 5-yr, Support Required
SLES SAP	
SLES-SAP-2S2V-1S	SLES for SAP Apps (1-2 CPU, 1-2 VM); Priority 1-Yr SnS

Table 25 Software (for 2-CPU servers) *(continued)*

PID Description	Product ID (PID)
SLES-SAP-2SUV-1S	SLES for SAP Apps (1-2 CPU, Unl VM); Priority 1-Yr SnS
SLES-SAP-2S2V-3S	SLES for SAP Apps (1-2 CPU, 1-2 VM); Priority 3-Yr SnS
SLES-SAP-2SUV-3S	SLES for SAP Apps (1-2 CPU, Unl VM); Priority 3-Yr SnS
SLES-SAP-2S2V-5S	SLES for SAP Apps (1-2 CPU, 1-2 VM); Priority 5-Yr SnS
SLES-SAP-2SUV-5S	SLES for SAP Apps (1-2 CPU, Unl VM); Priority 5-Yr SnS
SLES-SAP-2S2V-5A	SLES for SAP Apps (1-2 CPU, 1-2 VM); 5-Yr Support Reqd
SLES-SAP-2SUV-3A	SLES for SAP Apps (1-2 CPU, Unl VM); 3-Yr Support Reqd
SLES-SAP-2S2V-3A	SLES for SAP Apps (1-2 CPU, 1-2 VM); 3-Yr Support Reqd
SLES-SAP-2SUV-5A	SLES for SAP Apps (1-2 CPU, Unl VM); 5-Yr Support Reqd
SLES-SAP-2S2V-1A	SLES for SAP Apps (1-2 CPU, 1-2 VM); 1-Yr Support Reqd
SLES-SAP-2SUV-1A	SLES for SAP Apps (1-2 CPU, Unl VM); 1-Yr Support Reqd
SUSE	
SLES-2S2V-1A	SUSE Linux Enterprise Svr (1-2 CPU,1-2 VM); 1-Yr Support Req
SLES-2SUV-1A	SUSE Linux Enterprise Svr (1-2 CPU,Unl VM); 1-Yr Support Req
SLES-2S2V-3A	SUSE Linux Enterprise Svr (1-2 CPU,1-2 VM); 3-Yr Support Req
SLES-2SUV-3A	SUSE Linux Enterprise Svr (1-2 CPU,Unl VM); 3-Yr Support Req
SLES-2S2V-5A	SUSE Linux Enterprise Svr (1-2 CPU,1-2 VM); 5-Yr Support Req
SLES-2SUV-5A	SUSE Linux Enterprise Svr (1-2 CPU,Unl VM); 5-Yr Support Req
SLES-2S2V-1S	SUSE Linux Enterprise Svr (1-2 CPU,1-2 VM); Prio 1-Yr SnS
SLES-2SUV-1S	SUSE Linux Enterprise Svr (1-2 CPU,Unl VM); Prio 1-Yr SnS
SLES-2S2V-3S	SUSE Linux Enterprise Svr (1-2 CPU,1-2 VM); Prio 3-Yr SnS
SLES-2SUV-3S	SUSE Linux Enterprise Svr (1-2 CPU,Unl VM); Prio 3-Yr SnS
SLES-2S2V-5S	SUSE Linux Enterprise Svr (1-2 CPU,1-2 VM); Prio 5-Yr SnS
SLES-2SUV-5S	SUSE Linux Enterprise Svr (1-2 CPU,Unl VM); Prio 5-Yr SnS
SLES-2S-HA-1S	SUSE Linux High Availability Ext (1-2 CPU); 1yr SnS
SLES-2S-HA-3S	SUSE Linux High Availability Ext (1-2 CPU); 3yr SnS
SLES-2S-HA-5S	SUSE Linux High Availability Ext (1-2 CPU); 5yr SnS
SLES-2S-GC-1S	SUSE Linux GEO Clustering for HA (1-2 CPU); 1yr Sns
SLES-2S-GC-3S	SUSE Linux GEO Clustering for HA (1-2 CPU); 3yr SnS
SLES-2S-GC-5S	SUSE Linux GEO Clustering for HA (1-2 CPU); 5yr SnS

STEP 18 SELECT OPERATING SYSTEM MEDIA KIT

Select the optional operating system media listed in *Table 26*.

Table 26 OS Media

Product ID (PID)	PID Description
RHEL-6	RHEL 6 Recovery Media Only (Multilingual)
SLES-11	SLES 11 media only (multilingual)
MSWS-08R2-STHV-RM	Windows Svr 2008 R2 ST (1-4CPU, 5CAL), Media
MSWS-08R2-ENHV-RM	Windows Svr 2008 R2 EN (1-8CPU, 25CAL), Media
MSWS-08R2-DCHV-RM	Windows Svr 2008 R2 DC (1-8CPU, 25CAL), Media
MSWS-12-ST2S-RM	Windows Server 2012 Standard (2 CPU/2 VMs) Recovery Media
MSWS-12-DC2S-RM	Windows Server 2012 Datacenter(2 CPU/Unlimited VM) Rec Media
MSWS-12R2-ST2S-RM	Windows Server 2012 R2 Standard (2 CPU/2 VMs) Recovery Media
MSWS-12R2-DC2S-RM	Windows Server 2012 R2 Datacen (2 CPU/Unlimited VM) Rec Media

STEP 19 SELECT SERVICE and SUPPORT LEVEL

A variety of service options are available, as described in this section.

Unified Computing Warranty, No Contract

If you have noncritical implementations and choose to have no service contract, the following coverage is supplied:

- Three-year parts coverage.
- Next business day (NBD) onsite parts replacement eight hours a day, five days a week.
- 90-day software warranty on media.
- Ongoing downloads of BIOS, drivers, and firmware updates.
- UCSM updates for systems with Unified Computing System Manager. These updates include minor enhancements and bug fixes that are designed to maintain the compliance of UCSM with published specifications, release notes, and industry standards.

SMARTnet for UCS

For support of the entire Unified Computing System, Cisco offers the Cisco SMARTnet for UCS Service. This service provides expert software and hardware support to help sustain performance and high availability of the unified computing environment. Access to Cisco Technical Assistance Center (TAC) is provided around the clock, from anywhere in the world.

For UCS blade servers, there is Smart Call Home, which provides proactive, embedded diagnostics and real-time alerts. For systems that include Unified Computing System Manager, the support service includes downloads of UCSM upgrades. The Cisco SMARTnet for UCS Service includes flexible hardware replacement options, including replacement in as little as two hours. There is also access to Cisco's extensive online technical resources to help maintain optimal efficiency and uptime of the unified computing environment. You can choose a desired service listed in *Table 27*.

Table 27 Cisco SMARTnet for UCS Service

Product ID (PID)	On Site?	Description
CON-PREM-C220M4LF	Yes	ONSITE 24X7X2 UCS C220 M4 LFF
CON-OSP-C220M4LF	Yes	ONSITE 24X7X4 UCS C220 M4 LFF
CON-OSE-C220M4LF	Yes	ONSITE 8X5X4 UCS C220 M4 LFF
CON-OS-C220M4LF	Yes	ONSITE 8X5XNBD UCS C220 M4 LFF
CON-S2P-C220M4LF	No	SMARTNET 24X7X2 UCS C220 M4 LFF
CON-SNTP-C220M4LF	No	SMARTNET 24X7X4 UCS C220 M4 LFF
CON-SNTE-C220M4LF	No	SMARTNET 8X5X4 UCS C220 M4 LFF
CON-SNT-C220M4LF	No	SMARTNET 8X5XNBD UCS C220 M4 LFF

SMARTnet for UCS Hardware Only Service

For faster parts replacement than is provided with the standard Cisco Unified Computing System warranty, Cisco offers the Cisco SMARTnet for UCS Hardware Only Service. You can choose from two levels of advanced onsite parts replacement coverage in as little as four hours. SMARTnet for UCS Hardware Only Service provides remote access any time to Cisco support professionals who can determine if a return materials authorization (RMA) is required. You can choose a service listed in *Table 28*.

Table 28 SMARTnet for UCS Hardware Only Service

Product ID (PID)	Service Level GSP	On Site?	Description
CON-UCW7-C220M4LF	UCW7	Yes	UCS HW 24X7X4OS UCS C220 M4 LFF
CON-UCW5-C220M4LF	UCW5	Yes	UC PLUS 8X5XNBDOS UCS C220 M4 LFF

Unified Computing Partner Support Service

Cisco Partner Support Service (PSS) is a Cisco Collaborative Services service offering that is designed for partners to deliver their own branded support and managed services to enterprise customers. Cisco PSS provides partners with access to Cisco's support infrastructure and assets to help them:

- Expand their service portfolios to support the most complex network environments
- Lower delivery costs
- Deliver services that increase customer loyalty

Partner Unified Computing Support Options enable eligible Cisco partners to develop and consistently deliver high-value technical support that capitalizes on Cisco intellectual assets. This helps partners to realize higher margins and expand their practice.

PSS is available to all Cisco PSS partners, but requires additional specializations and requirements. For additional information, see the following URL:

www.cisco.com/go/partnerucssupport

The two Partner Unified Computing Support Options include:

- Partner Support Service for UCS
- Partner Support Service for UCS Hardware Only

Partner Support Service for UCS provides hardware and software support, including triage support for third party software, backed by Cisco technical resources and level three support. See *Table 29*.

Table 29 Partner Support Service for UCS

Product ID (PID)	Service Level GSP	On Site?	Description
CON-PSJ1-C220M4LF	PSJ1	No	UCS SUPP PSS 8X5XNBD UCS C220 M4 LFF
CON-PSJ2-C220M4LF	PSJ2	No	UCS SUPP PSS 8X5X4 UCS C220 M4 LFF
CON-PSJ3-C220M4LF	PSJ3	No	UCS SUPP PSS 24X7X4 UCS C220 M4 LFF
CON-PSJ4-C220M4LF	PSJ4	No	UCS SUPP PSS 24X7X2 UCS C220 M4 LFF

Partner Support Service for UCS Hardware Only provides customers with replacement parts in as little as two hours. See *Table 30*.

Table 30 Partner Support Service for UCS (Hardware Only)

Product ID (PID)	Service Level GSP	On Site?	Description
CON-PSW2-C220M4LF	PSW2	No	UCS W PL PSS 8X5X4 UCS C220 M4 LFF
CON-PSW3-C220M4LF	PSW3	No	UCS W PL PSS 24X7X4 UCS C220 M4 LFF
CON-PSW4-C220M4LF	PSW4	No	UCS W PL PSS 24X7X2 UCS C220 M4 LFF

Unified Computing Combined Support Service

Combined Services makes it easier to purchase and manage required services under one contract. SMARTnet services for UCS help increase the availability of your vital data center infrastructure and realize the most value from your unified computing investment. The more benefits you realize from the Cisco Unified Computing System (Cisco UCS), the more important the technology becomes to your business. These services allow you to:

- Optimize the uptime, performance, and efficiency of your UCS
- Protect your vital business applications by rapidly identifying and addressing issues
- Strengthen in-house expertise through knowledge transfer and mentoring
- Improve operational efficiency by allowing UCS experts to augment your internal staff resources
- Enhance business agility by diagnosing potential issues before they affect your operations

You can choose a service listed in *Table 31*.

Table 31 UCS Computing Combined Support Service

Product ID (PID)	Service Level GSP	On Site?	Description
CON-NCF2-C220M4LF	NCF2	No	CMB SPT SVC 24X7X2 UCS C220 M4 LFF
CON-NCF2P-C220M4LF	NCF2P	Yes	CMB SPT SVC 24X7X2OS UCS C220 M4 LFF
CON-NCF4P-C220M4LF	NCF4P	Yes	CMB SPT SVC 24X7X4OS UCS C220 M4 LFF
CON-NCF4S-C220M4LF	NCF4S	Yes	CMB SPT SVC 8X5X4OS UCS C220 M4 LFF
CON-NCFCS-C220M4LF	NCFCS	Yes	CMB SPT SVC 8X5XNBDOS UCS C220 M4 LFF
CON-NCFE-C220M4LF	NCFE	No	CMB SPT SVC 8X5X4 UCS C220 M4 LFF
CON-NCFP-C220M4LF	NCFP	No	CMB SPT SVC 24X7X4 UCS C220 M4 LFF
CON-NCFT-C220M4LF	NCFT	No	CMB SPT SVC 8X5XNBD UCS C220 M4 LFF

Unified Computing Drive Retention Service

With the Cisco Unified Computing Drive Retention (UCDR) Service, you can obtain a new disk drive in exchange for a faulty drive without returning the faulty drive. In exchange for a Cisco replacement drive, you provide a signed Certificate of Destruction (CoD) confirming that the drive has been removed from the system listed, is no longer in service, and has been destroyed.

Sophisticated data recovery techniques have made classified, proprietary, and confidential information vulnerable, even on malfunctioning disk drives. The UCDR service enables you to retain your drives and ensures that the sensitive data on those drives is not compromised, which reduces the risk of any potential liabilities. This service also enables you to comply with regulatory, local, and federal requirements.

If your company has a need to control confidential, classified, sensitive, or proprietary data, you might want to consider one of the Drive Retention Services listed in *Table 32*.

NOTE: Cisco does not offer a certified drive destruction service as part of this service.

Table 32 Drive Retention Service Options

Service Description	Service Program Name	Service Level GSP	Service Level	Product ID (PID)
SMARTnet for UCS Service with Drive Retention	UCS DR	UCSD7	24x7x4 Onsite	CON-UCSD7-C220M4LF
		UCSD5	8x5xNBD Onsite	CON-UCSD5-C220M4LF

Table 32 Drive Retention Service Options *(continued)*

Service Description	Service Program Name	Service Level GSP	Service Level	Product ID (PID)
SMARTnet for UCS HW ONLY+Drive Retention	UCS HW+DR	UCWD7	24x7x4 Onsite	CON-UCWD7-C220M4LF
		UCWD5	8x5xNBD Onsite	CON-UCWD5-C220M4LF

For more service and support information, see the following URL:

http://www.cisco.com/en/us/services/ps2961/ps10312/Unified_Computing_Services_Overview.pdf

For a complete listing of available services for Cisco Unified Computing System, see this URL:

http://www.cisco.com/en/us/products/ps10312/serv_group_home.html

OPTIONAL STEP - ORDER RACK(s)

The optional R42612 rack is available from Cisco for the C-Series servers, including the C240 M4 SFF server. This rack is a standard 19-inch rack and can be ordered with a variety of options, as listed in *Table 33*. Racks are shipped separately from the C240 M4 SFF server.

Table 33 Racks and Rack Options

Product ID (PID)	PID Description
RACK2-UCS	Cisco R42612 expansion rack, no side panels. This type of rack is used for multiple-rack deployments.
RACK2-UCS2	Cisco R42612 static (standard) rack, with side panels. This type of rack is used for single-rack and end of row deployments. Side panels are needed for racks at the ends of multiple-rack deployments. For example, when configuring a row of 5 racks, order 1 standard rack plus 4 expansion racks. Apply the side panels from the standard rack to the racks at each end of the row.
RACK-BLANK-001	Blanking panels (qty 12), 1U, plastic, toolless. Recommended to ensure proper airflow. Fill all empty RU spaces in the front of the rack. Because each blanking panel PID includes 12 panels, use the following calculation: 42RU - occupied RU = available RU. Divide available RU by 12 to determine PID order quantity.
RACK-CBLMGT-001	Cable mgt D rings (qty 10), metal. Use the D rings to bundle system cables to ensure proper airflow.
RACK-CBLMGT-003	Brush strip (qty 1), 1 U. The brush strip promotes proper airflow while allowing cables to be passed from the front to the rear of the rack.
RACK-CBLMGT-011	Cable mgt straps (qty 10), Velcro. Use the Velcro straps to bundle system cables to ensure proper airflow.
RACK-FASTEN-001	Mounting screws (qty 100), M6. The rack ships with nuts and screws, but extras may be ordered.
RACK-FASTEN-002	Cage nuts (qty 50), M6. The rack ships with nuts and screws, but extras may be ordered.
RACK2-JOIN-001	Rack joining kit. Use the kit to connect adjacent racks within a row. Order 1 unit less than the number of racks in the row.
RACK2-GRND-001	Cisco R42612 grounding kit

For more information about the R42612 rack, see **RACKS, page 75**.

OPTIONAL STEP - ORDER PDU

An optional power distribution unit (PDU) is available from Cisco for the C-Series rack servers, including the C240 M4 server. This PDU is available in a zero rack unit (RU) style or horizontal PDU style (see *Table 34*).For more information about the PDU, see **PDUs, page 77**.

Table 34 Available PDUs

Product ID (PID)	Description	Plug	Country
Zero-RU PDUs			
RP208-30M1P-6-36	30 A, single-phase, vertical-mount PDU with 6 C19 and 36 C13 connectors	L6-30P	North America
RP208-30M3P-6-30	30 A, three-phase, vertical-mount PDU with 6 C19 and 30 C13 connectors	L15-30P	North America
RP208-60M3P-12-9	60 A, three-phase, vertical-mount PDU with 12 C19 and 9 C13 connectors	IEC60309 460P9	North America
RP230-32M1P-6-36	32 A, single-phase, button-mount (rear and sides) PDU with 6 C19 and 36 C13 connectors	IEC60309 332P6	International
RP230-32M3P-12-12	32 A, single-phase, button-mount (rear and sides) PDU with 12 C19 and 12 C13 connectors	IEC60309 532P6	International
Horizontal PDUs (occupy RU space)			
RP208-30M1P-4-8 (1 RU space)	30 A, single-phase, horizontal-mount PDU with 4 C19 and 8 C13 connectors	L6-30P	North America
RP208-60M3P-12 (2 RU spaces)	48 A, three-phase, horizontal-mount PDU with 12 C19 connectors	L15-30P	North America

SUPPLEMENTAL MATERIAL

CHASSIS

An internal view of the C220 M4 LFF chassis with the top cover removed is shown in *Figure 6*.

Figure 6 C220 M4 LFF With Top Cover Off

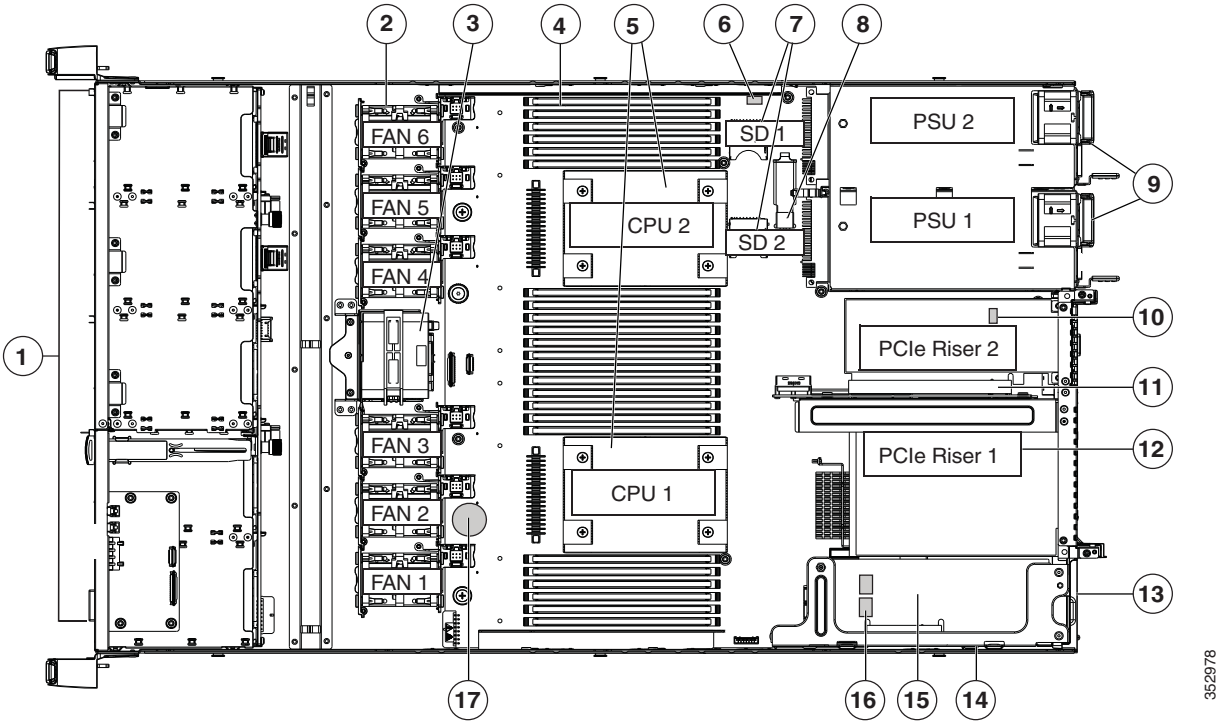

1	Drives (SAS drives are hot-swappable)	10	Trusted platform module (TPM) socket on motherboard (not visible in this view)
2	Cooling fan modules (six)	11	PCIe riser 2 (half-height PCIe slot 2)
3	SuperCap Power Module (RAID backup) mounting bracket	12	PCIe riser 1 (full-height PCIe slot 1)
4	DIMM sockets on motherboard (24)	13	Modular LOM (mLOM) connector on chassis floor
5	CPUs and heatsinks (up to two)	14	Cisco modular RAID controller PCIe riser (dedicated riser with horizontal socket)
6	Embedded SATA RAID header for RAID 5 key (not used in this server)	15	Cisco modular RAID controller card
7	SD card bays on motherboard (two)	16	Embedded SATA RAID mini-SAS connectors on motherboard (not used in this server)
8	Internal USB 3.0 port on motherboard	17	RTC battery on motherboard
9	Power supplies (up to two, hot-swappable when redundant as 1+1)		

Block Diagram

A simplified block diagram of the C220 M4 server is shown in *Figure 7*.

Figure 7 C220 M4 SFF Block Diagram (simplified)

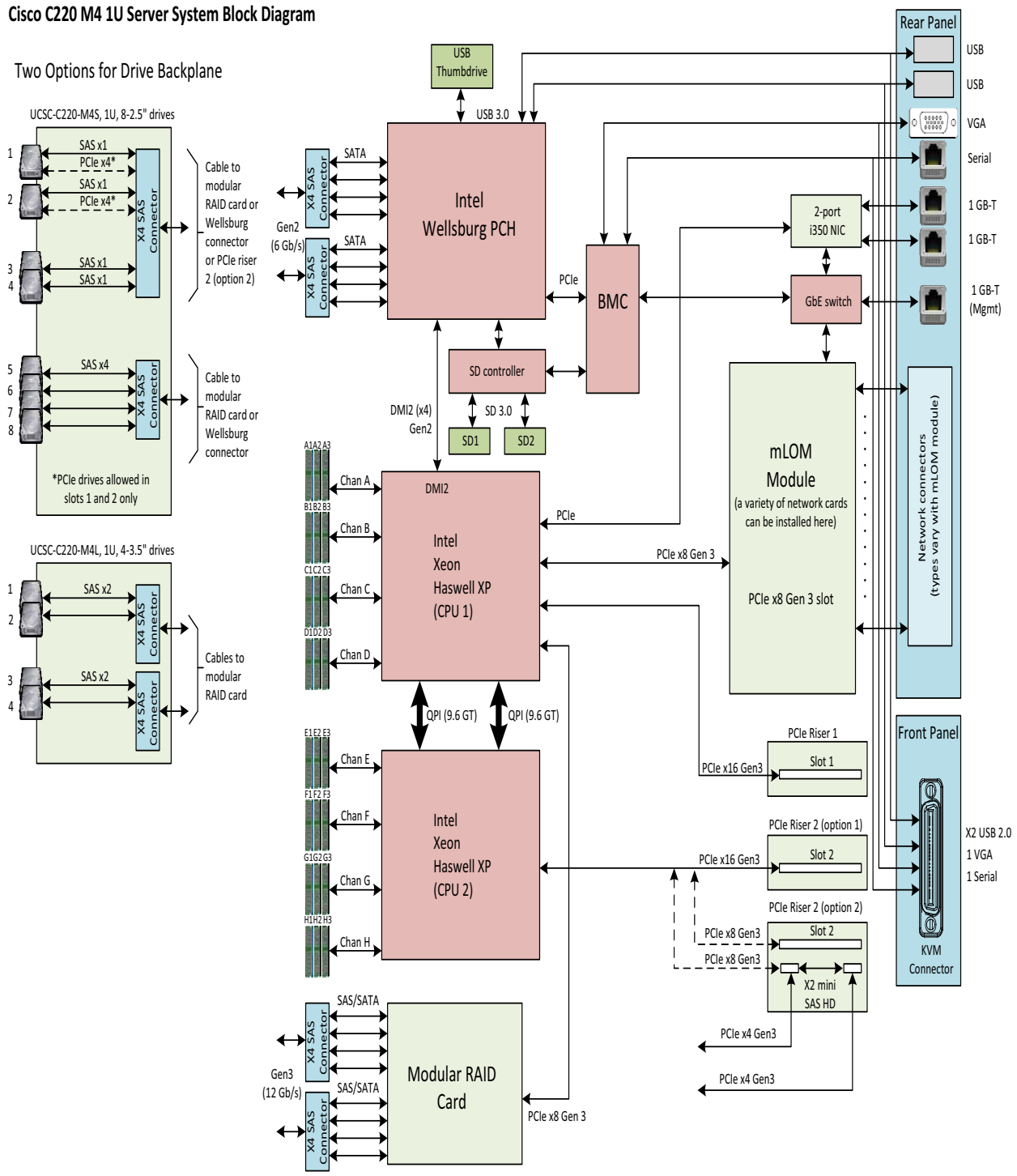

CPUs and DIMMs

Physical Layout

Each CPU has four DIMM channels:

- CPU1 has channels A, B, C, and D
- CPU2 has channels E, F, G, and H

Each DIMM channel has three slots: slot 1, slot 2, and slot 3. The blue-colored DIMM slots are for slot 1, the black-colored slots for slot 2, and the white slots for slot 3.

As an example, DIMM slots A1, B1, C1, and D1 belong to slot 1, while A2, B2, C2, and D2 belong to slot 2.

Figure 8 shows how slots and channels are physically laid out on the motherboard. The DIMM slots on the right half of the motherboard (channels A, B, C, and D) are associated with CPU 1, while the DIMM slots on the left half of the motherboard (channels E, F, G, and H) are associated with CPU 2. The slot 1 (blue) DIMM slots are always located farther away from a CPU than the corresponding slot 2 (black) and slot 3 (white) slots. Slot 1 slots (blue) are populated before slot 2 slots (black) and slot 3 (white) slots.

Figure 8 Physical Layout of CPU DIMM Channels and Slots

Memory Population Rules

When considering the memory configuration of your server, you should consider the following items:

- Each channel has three DIMM slots (for example, channel A = slots A1, A2, and A3).
  - A channel can operate with one, two, or three DIMMs installed.
  - If a channel has only one DIMM, populate slot 1 first (the blue slot).
- When both CPUs are installed, populate the DIMM slots of each CPU identically.
  - Fill blue slots in the channels first: A1, E1, B1, F1, C1, G1, D1, H1
  - Fill black slots in the channels second: A2, E2, B2, F2, C2, G2, D2, H2
  - Fill white slots in the channels third: A3, E3, B3, F3, C3, G3, D3, H3
- Any DIMM installed in a DIMM socket for which the CPU is absent is not recognized.
- Observe the DIMM mixing rules shown in *Table 35*

Table 35 DIMM Rules for C220 M4 Servers

DIMM Parameter	DIMMs in the Same Channel	DIMM in the Same Slot[1]
DIMM Capacity		
RDIMM = 8, 16, or 32 GB LRDIMM = 32 or 64 GB TSV-RDIMM = 64 GB	DIMMs in the same channel (for example, A1, A2, and A3) can have different capacities.	For best performance, DIMMs in the same slot (for example, A1, B1, C1, D1) should have the same capacity.
	Do not mix TSV-RDIMMS with LRDIMMs nor RDIMMs	Do not mix TSV-RDIMMS with LRDIMMs nor RDIMMs
DIMM Speed		
2400-MHz 2133-MHz	DIMMs will run at the lowest speed of the CPU installed	DIMMs will run at the lowest speed of the CPU installed
DIMM Type		
TSV-RDIMMS, RDIMMs, or LRDIMMs	Do not mix DIMM types in a channel	Do not mix DIMM types in a slot
DIMMs per Channel (DPC)	**1 DPC, 2 DPC, or 3 DPC**	
	See *Table 6 on page 18* for valid LRDIMM and RDIMM 1 DPC, 2 DPC, and 3 DPC memory configurations	

Notes . . .

1. Although you can have different DIMM capacities in the same slot, this will result in less than optimal performance. For optimal performance, all DIMMs in the same slot should be identical.

DIMM Population Order

Populate the DIMMs for a CPU according to *Table 36*.

Table 36 DIMM Population Order per CPU

DIMMs per CPU	Populate CPU 1 Slots	Populate CPU 2 Slots
1	A1	E1
2	A1, B1	E1, F1
3	A1, B1, C1	E1, F1, G1
4	A1, B1, C1, D1	E1, F1, G1, H1
8	A1, B1, C1, D1, A2, B2, C2, D2	E1, F1, G1, H1, E2, F2, G2, H2
12	A1, B1, C1, D1, A2, B2, C2, D2, A3, B3, C3, D3	E1, F1, G1, H1, E2, F2, G2, H2, E3, F3, G3, H3

Recommended Memory Configuration

This section explains the recommended DIMM population order rules for the C220 M4 server.

- All DIMMs must be DDR4 DIMMs.
- Do not mix:
  - DIMMs with different clock rates in a channel
  - RDIMMs and LRDIMMs
- There are blue, black, and white DIMM slots. Populate blue slots first.
- When DIMMs ranks are mixed in the same channel, always populate the highest rank DIMM in the blue DIMM slot and lower rank DIMM(s) in the black and white DIMM slots.

Many memory configurations are possible. For best results, follow *Table 37* when populating 2133-MHz DIMMs for Intel Xeon E5-2600 v3 CPUs and *Table 38* when populating 2400-MHz DIMMs for Intel Xeon E5-2600 v4 CPUs.

NOTE: These tables list only some recommended and suggested configurations. There are numerous other possible configurations supported by Cisco. Cisco supports all mixing and population configurations of the Cisco DIMMs as long as the mixing does not violate the few fundamental rules noted in this document.

Table 37 Recommended Memory Configurations for Intel Xeon E5-2600 v3 CPUs (with 2133-MHz DIMMs)[1]

Total System Memory Size	CPU 1 DIMMs			CPU 2 DIMMs			DIMM Max Speed (MHz)	Total DIMMs
	Blue Slots Slot 1 (A1,B1, C1,D1)	Black Slots Slot 2 (A2,B2, C2,D2)	White Slots Slot 3 (A3,B3, C3,D3)	Blue Slots Slot 1 (E1,F1, G1,H1)	Black Slots Slot 2 (E2,F2, G2,H2)	White Slots Slot 3 (E3,F3, G3,H3)		
64 GB	4x8 GB	—	—	4x8 GB	—	—	2133	8
128 GB	4x8 GB	4x8 GB	—	4x8 GB	4x8 GB	—	2133	16
	4x16 GB	—	—	4x16 GB	—	—	2133	8
192 GB	4x8 GB	4x8 GB	4x8 GB	4x8 GB	4x8 GB	4x8 GB	1600	24
	4x16 GB	4x8 GB	—	4x16 GB	4x8 GB	—	2133	16
256 GB	4x16 GB	4x16 GB	—	4x16 GB	4x16 GB	—	2133	16
	4x32 GB	—	—	4x32 GB	—	—	2133	8
384 GB	4x16 GB	4x16 GB	4x16 GB	4x16 GB	4x16 GB	4x16 GB	1866	24
512 GB	4x32 GB	4x32 GB	—	4x32 GB	4x32 GB	—	2133	16
	4x64 GB	—	—	4x64 GB	—	—	2133	8
768 GB	4x32 GB	4x32 GB	4x32 GB	4x32 GB	4x32 GB	4x32 GB	1866	24
1024 GB	4x64 GB	4x64 GB	—	4x64 GB	4x64 GB	—	2133	16
1536 GB	4x64 GB	4x64 GB	4x64 GB	4x64 GB	4x64 GB	4x64 GB	1600	24

Notes . . .

1. Rows marked in yellow indicate best performance.

Table 38 Recommended Memory Configurations for Intel Xeon E5-2600 v4 CPUs (with 2400-MHz DIMMs)[1]

Total System Memory Size	CPU 1 DIMMs			CPU 2 DIMMs			DIMM Max Speed (MHz)	Total DIMMs
	Blue Slots Slot 1 (A1,B1, C1,D1)	Black Slots Slot 2 (A2,B2, C2,D2)	White Slots Slot 3 (A3,B3, C3,D3)	Blue Slots Slot 1 (E1,F1, G1,H1)	Black Slots Slot 2 (E2,F2, G2,H2)	White Slots Slot 3 (E3,F3, G3,H3)		
64 GB	4x8 GB	—	—	4x8 GB	—	—	2400	8
128 GB	4x8 GB	4x8 GB	—	4x8 GB	4x8 GB	—	2400	16
	4x16 GB	—	—	4x16 GB	—	—	2400	8
192 GB	4x8 GB	4x8 GB	4x8 GB	4x8 GB	4x8 GB	4x8 GB	2133	24
	4x16 GB	4x8 GB	—	4x16 GB	4x8 GB	—	2133	16
256 GB	4x16 GB	4x16 GB	—	4x16 GB	4x16 GB	—	2400	16
	4x32 GB	—	—	4x32 GB	—	—	2400	8
320 GB	4x32 GB	4x8 GB	—	4x32 GB	4x8 GB	—	2133	16
384 GB	4x16 GB	4x16 GB	4x16 GB	4x16 GB	4x16 GB	4x16 GB	2133	24
	4x32GB	4x16GB	—	4x32GB	4x16GB	—	2133	16
512 GB	4x32 GB	4x32 GB	—	4x32 GB	4x32 GB	—	2400	16
	4x64 GB	—	—	4x64 GB	—	—	2400	8
768 GB	4x32 GB	4x32 GB	4x32 GB	4x32 GB	4x32 GB	4x32 GB	1866	24
1024 GB	4x64 GB	4x64 GB	—	4x64 GB	4x64 GB	—	2400	16
1536 GB	4x64 GB	4x64 GB	4x64 GB	4x64 GB	4x64 GB	4x64 GB	2133	24

Notes . . .

1. Rows marked in yellow indicate best performance.

Additional DIMM Populations

The list in *Table 39* is not a complete list of all supported DIMM populations, but highlights common configuration options.

Table 39 Supported DIMM Configurations

CPU 1 DIMMs	Total DIMMs for CPU 1	CPU 1 Capacity	CPU 2 DIMMs	Total DIMMs for CPU 2	CPU 2 Capacity	Total Capacity for 2 CPUs
1 x 8 GB	1	8 GB	1 x 8 GB	1	8 GB	16 GB
2 x 8 GB	2	16 GB	2 x 8 GB	2	16 GB	32 GB
1 x 16 GB	1	16 GB	1 x 16 GB	1	16 GB	32 GB
4 x 8 GB	4	32 GB	4 x 8 GB	4	32 GB	64 GB
2 x 16 GB	2	32 GB	2 x 16 GB	2	32 GB	64 GB
1 x 32 GB	1	32 GB	1 x 32 GB	1	32 GB	64 GB
8 x 8 GB	8	64 GB	8 x 8 GB	8	64 GB	128 GB
4 x 16 GB	4	64 GB	4 x 16 GB	4	64 GB	128 GB
2 x 32 GB	2	64 GB	2 x 32 GB	2	64 GB	128 GB
12 x 8 GB	12	96 GB	12 x 8 GB	12	96 GB	192 GB
8 x 16 GB	8	128 GB	8 x 16 GB	8	128 GB	256 GB
4 x 32 GB	4	128 GB	4 x 32 GB	4	128 GB	256 GB
12 x 16 GB	12	192 GB	12 x 16 GB	12	192 GB	384 GB
8 x 32 GB	8	256 GB	8 x 32 GB	8	256 GB	512 GB
12 x 32 GB	12	384 GB	12 x 32 GB	12	384 GB	768 GB
12 x 64 GB	12	768 GB	12 x 64 GB	12	768 GB	1536 GB

RAID Details

The available RAID configurations are shown in this section.

(1) 1- and 2-CPU Configurations

Select one of these:

- One Cisco 12G SAS Modular RAID controller or Cisco 12 Gbps Modular SAS HBA from *Table 8 on page 23*, or
- One or two Cisco 9300-8E 12G SAS HBAs from *Table 8 on page 23*
- One Cisco 12G SAS Modular RAID controller or Cisco 12 Gbps Modular SAS HBA from *Table 8 on page 23* and one or two Cisco 9300-8E 12G SAS HBAs from *Table 8 on page 23*

Select an appropriate optional RAID configuration listed in *Table 8 on page 23*

RAID Option ROM (OPROM) Settings

The server contains an Option ROM (OPROM) for the PCIe slots. The server has a finite amount of option ROM with which it can boot up devices. Go into the BIOS and disable the OPROM on the PCIe slots not used for booting so that resources are available for the slots that are used for booting. An example OPROM BIOS screen is shown in *Figure 9*.

Figure 9 Example BIOS Screen for OPROM

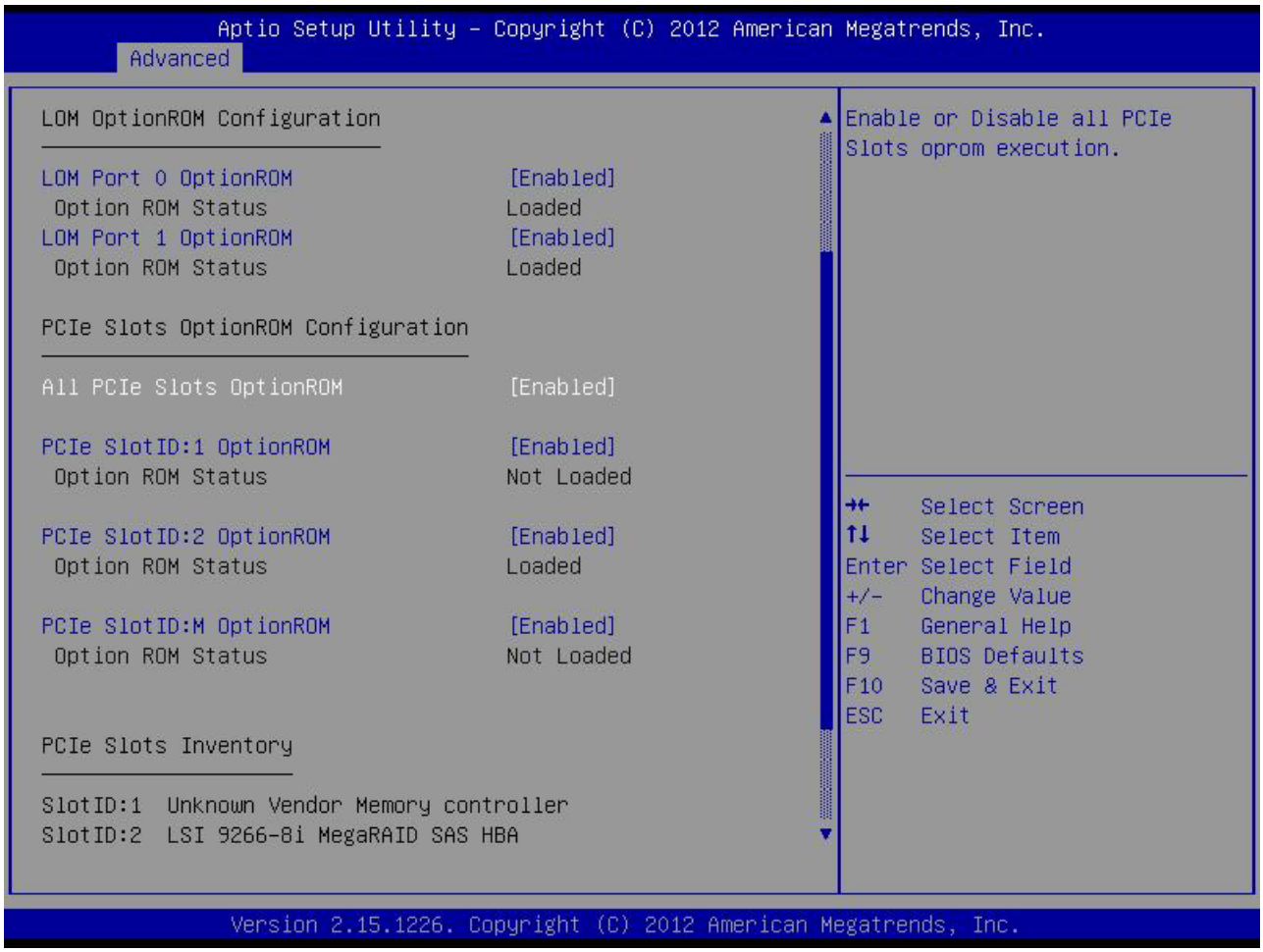

Serial Port Details

The pinout details of the rear RJ-45 serial port connector are shown in *Figure 10*.

Figure 10 Serial Port (Female RJ-45 Connector) Pinout

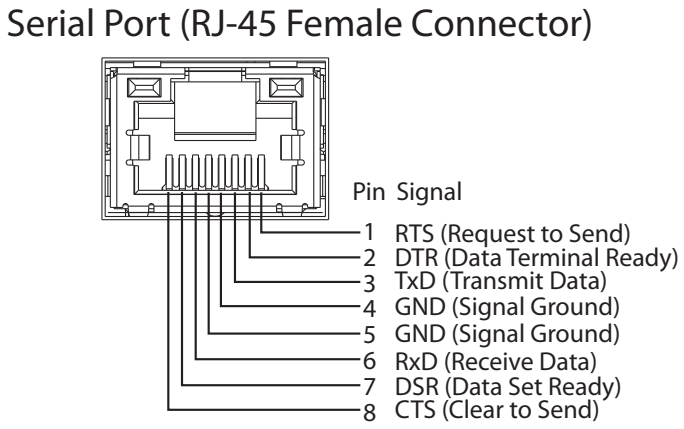

Upgrade and Servicing-Related Parts

This section lists the upgrade and servicing-related parts you may need during the life of your server. Some of these parts are configured with every server, and some may be ordered when needed or may be ordered and kept on hand as spares for future use. See *Table 40*.

Table 40 Upgrade and Servicing-related Parts for UCS C220 M4 LFF Server

Spare Product ID (PID)	Description
UCSC-HS-C220M4=	Heat sink for UCS C220 M4 rack servers
UCS-CPU-GREASE3=	M4 Server CPU thermal grease syringe - needed for heatsink seal
UCS-CPU-CVR-EP-M4=	CPU load plate dust cover (for unpopulated CPU sockets)
UCSX-HSCK=	UCS Processor Heat Sink Cleaning Kit For Replacement of CPU
UCSC-PCI-2A-220M4=	C220 M4 PCIe Riser 1&2 Assy
UCSC-PCI-2C-220M4=	C220 M4 PCIe Riser 3 (HBA)
UCSC-PCIF-01H=	PCIe Low Profile blanking panel for UCS C-Series Server
UCSC-PCIF-01F=	PCIe Full Height blanking panel for UCS C-Series Server
UCSC-BBLKD-L	3.5-inch HDD blanking panel[1]
UCSC-MLOM-BLK=	MLOM blanking panel
UCSC-RAILF-M4=	Tool-Less Friction Rail Kit for C220 M4 rack servers
UCSC-CMAF-M4=	Reversible CMA for C220 M4 friction & ball bearing rail kits
UCSC-RAILB-M4=	Tool-Less Ball Bearing Rail Kit for C220 M4 and C220 M4 rack servers
UCSC-FAN-C220M4=	C220 M4 Fan Module (one)
UCSC-BAFF-C220M4=	C220 M4 Air Baffle, Plastic Kit
N20-BKVM=	KVM cable for Server console port
UCSC-PSU-BLKP1U=	Power Supply Blanking Panel for C220 M4 servers
UCS-220CBLSR4=	C220 M4 SATA/SW RAID cable (1) for 4 HDD backplane chassis[2]
UCS-220CBLMR4=	C220 M4 RAID controller cable (1) for 4HDD bckpln chassis[2]
UCSC-EARS-C220M4=	C200 M4 rack ears kit (two ears)

Notes . . .

1. A drive blanking panel must be installed if you remove a disk drive from a UCS server. These panels are required to maintain system temperatures at safe operating levels, and to keep dust away from system components.
2. Required if ordering the RAID controller as a spare or to replace damaged cables

Adding an Additional CPU (with CPU heat sink) or Replacing CPUs

All Cisco UCS two CPU socket-capable servers can be upgraded from having one to having two CPUs configured or can also support replacement of the CPUs. You will need to order and install a heat sink when adding any additional CPU to a server. Instructions for installing the new CPU or replacing CPUs and heat sink can be found at the following link:

http://www.cisco.com/c/en/us/td/docs/unified_computing/ucs/c/hw/C220M4/install/C220M4.html

NOTE: Unlike previous generation servers, the C220 M4 has tool-less CPU sockets, so no separate tools (such as “pick n place” tools) are required to add or replace CPUs.

See the section titled “Replacing CPUs and Heatsinks.”

Motherboard Lithium Battery

You can order a replacement motherboard battery. Installation instructions are found at this link:

http://www.cisco.com/c/en/us/td/docs/unified_computing/ucs/c/hw/C220M4/install/C220M4.html

See the section titled “Replacing the Motherboard RTC Battery.”

Thermal Grease (with syringe applicator) for CPU to Heatsink Seal

Thermal grease must be applied to the top of the CPU where it comes in contact with the heat sink. (a grease syringe also ships with each CPU spare option kit). Instructions for applying thermal grease are found at:

http://www.cisco.com/c/en/us/td/docs/unified_computing/ucs/c/hw/C220M4/install/C220M4.html

See the section titled “Replacing CPUs and Heatsinks.”

CAUTION: Use only the thermal grease specified for this server (UCS-CPU-GREASE3=). This thermal grease comes in a white-tipped syringe and is to be used only in the C220 M4 and C240 M4 servers. Other servers use thermal grease in a blue-tipped syringe (UCS-CPU-GREASE=).

Thermal grease for other systems may have different thermal conductivity properties and may cause overheating if used in the C220 M4 or C240 M4 servers.

DO NOT use thermal grease available for purchase at any commercial electronics store. If these instructions are not followed, the CPU may overheat and be destroyed.

NOTE: When you purchase a spare CPU, the thermal grease with syringe applicator is included.

Air Baffle Replacement Kit

Air baffles are designed to direct airflow through the server to maintain server temperature at a safe operating level. These baffles must always remain installed during server operation. The Air Baffle Replacement Kit includes the air baffles needed for one UCS C220 M4 server.

CPU Heat Sink Cleaning Kit

The cleaning kit is used to remove the existing thermal compound from the bottom of the heat sink during a CPU replacement process. Instructions for cleaning are found at the following link:

http://www.cisco.com/c/en/us/td/docs/unified_computing/ucs/c/hw/C220M4/install/C220M4.html

See the section titled “Replacing CPUs and Heatsinks.”

NOTE: When you purchase a spare CPU, the CPU cleaning kit is included.

RACKS

The Cisco R42612 rack (see *Figure 11 on page 76*) is certified for Cisco UCS installation at customer sites and is suitable for the following equipment:

- Cisco UCS B-Series servers and fabric interconnects
- Cisco UCS C-Series and select Nexus switches

The rack is compatible with hardware designed for EIA-standard 19-inch racks. Rack specifications are listed in *Table 41*.

Table 41 R42612 Specifications

Cisco R42612 Rack	Standard (Static with side panels)	Expansion (Static without Side Panels)
Dimensions (H x W x D)	79.25 x 23.50 x 49.84 in. (2013 x 597 x 1266 mm)	79.25 x 23.50 x 49.84 in. (2013 x 597 x 1266 mm)
Dimensions (H x W x D) with packaging	84.25 x 32 x 54.84 in. (2140 x 813 x 1393 mm)	84.25 x 32 x 54.84 in.(2140 x 813 x 1393 mm)
Distance from front mounting rail to rear mounting rail	29.19 in. (741.5 mm)	29.19 in. (741.5 mm)
Weight	339.51 lb (154 kg)	264.55 lb (120 kg)
Weight with packaging	410.06 lb (186 kg)	335.10 lb (152 kg)
Side panels included	Yes	No
Equipment mounting capacity	42 RU	42 RU
Static load capacity	2700 lb (1224.7 kg)	2700 lb (1224.7 kg)
Dynamic load capacity	N/A	N/A

Figure 11 Cisco R42612 Rack

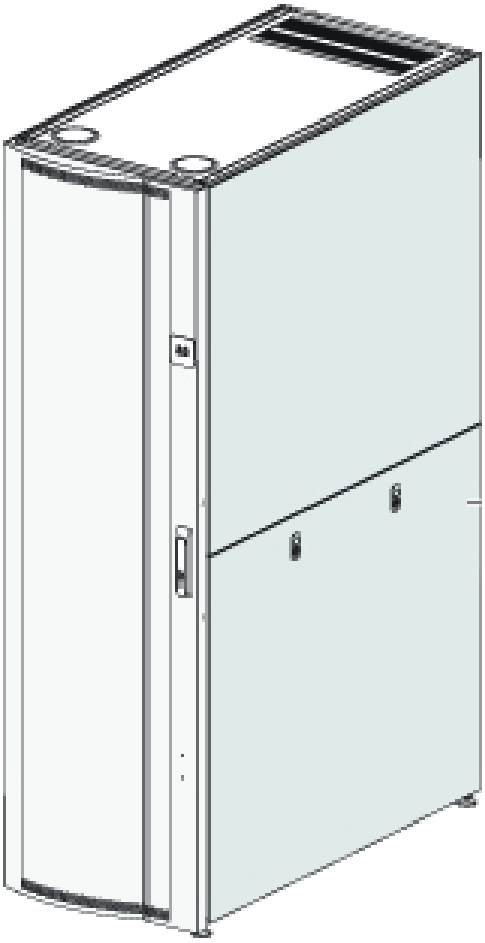

Front View

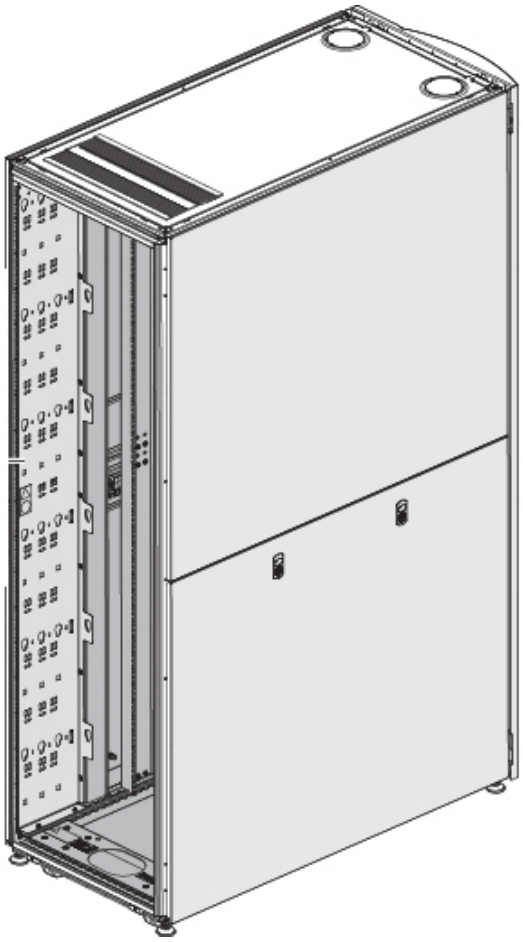

Rear View

PDUs

Cisco RP Series Power Distribution Units (PDUs) offer power distribution with branch circuit protection.

Cisco RP Series PDU models distribute power to up to 42 outlets. The architecture organizes power distribution, simplifies cable management, and enables you to move, add, and change rack equipment without an electrician.

With a Cisco RP Series PDU in the rack, you can replace up to two dozen input power cords with just one. The fixed input cord connects to the power source from overhead or under-floor distribution. Your IT equipment is then powered by PDU outlets in the rack using short, easy-to-manage power cords.

The C-series severs accept the zero-rack-unit (0RU) or horizontal PDU. See *Figure 12* for one example of a zero rack unit PDU.

Figure 12 RP208-30M1P-6-36 PDU

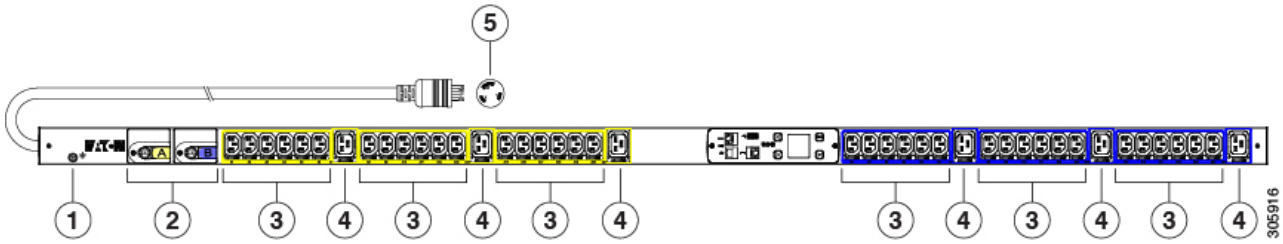

1 = Ground

2 = 20 A circuit breakers

3 = IEC 60320 C13 outlets

4 = EC 60320 C19 outlets

5 = NEMA L6-30P plug

KVM CABLE

The KVM cable provides a connection into the server, providing a DB9 serial connector, a VGA connector for a monitor, and dual USB ports for a keyboard and mouse. With this cable, you can create a direct connection to the operating system and the BIOS running on the server.

The KVM cable ordering information is listed in *Table 42*.

Table 42 KVM Cable

Product ID (PID)	PID Description
N20-BKVM=	KVM cable for B-Series Blade Server console port

Figure 13 KVM Cable

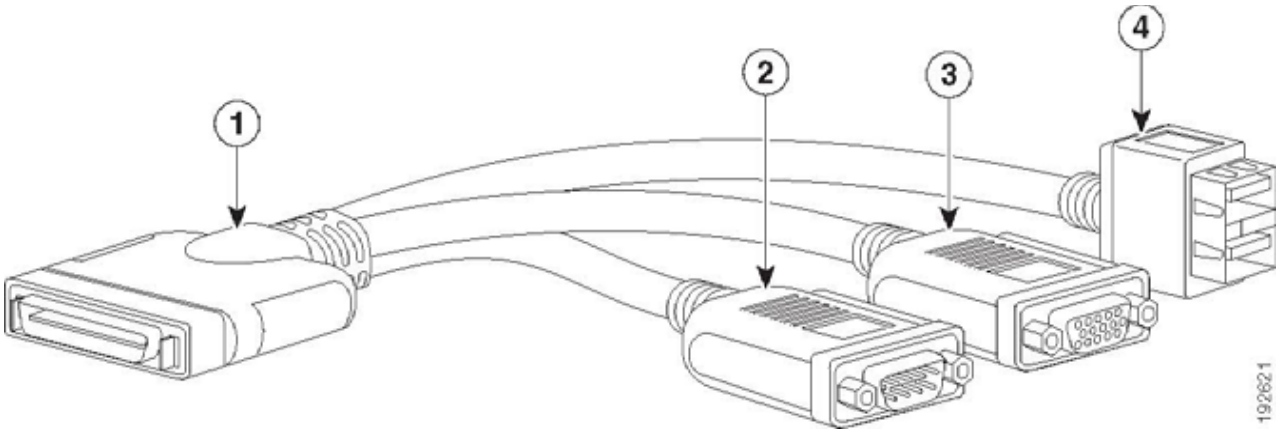

1	Connector (to server front panel)	**3**	VGA connector (for a monitor)
2	DB-9 serial connector	**4**	Two-port USB connector (for a mouse and keyboard)

Motherboard USB and SD Ports, and RAID Card Backup Location

The C220 M4 LFF motherboard has a general-purpose USB socket, and two SD sockets as shown in *Figure 14*. The mounting location for the RAID SuperCap data cache power backup module is also shown.

Figure 14 Motherboard USB and SD Ports and RAID Card SuperCap Location

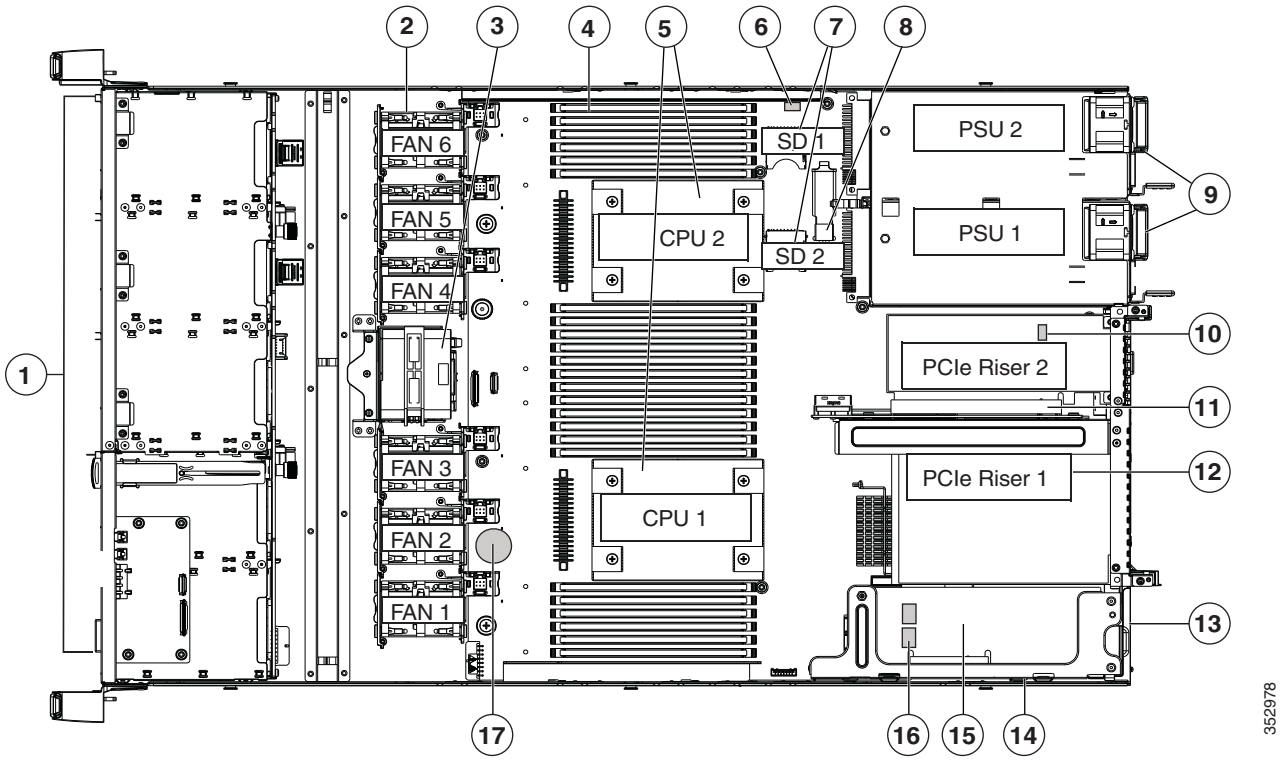

1	Drives (SAS drives are hot-swappable)	10	Trusted platform module (TPM) socket on motherboard (not visible in this view)
2	Cooling fan modules (six)	11	PCIe riser 2 (half-height PCIe slot 2)
3	SuperCap Power Module (RAID backup) mounting bracket	12	PCIe riser 1 (full-height PCIe slot 1)
4	DIMM sockets on motherboard (24)	13	Modular LOM (mLOM) connector on chassis floor
5	CPUs and heatsinks (up to two)	14	Cisco modular RAID controller PCIe riser (dedicated riser with horizontal socket)
6	Embedded SATA RAID header for RAID 5 key (not presently used)	15	Cisco modular RAID controller card
7	SD card bays on motherboard (two)	16	Embedded SATA RAID mini-SAS connectors on motherboard (not used in this server)
8	Internal USB 3.0 port on motherboard	17	RTC battery on motherboard
9	Power supplies (up to two, hot-swappable when redundant as 1+1)		

TECHNICAL SPECIFICATIONS

Dimensions and Weight

Table 43 UCS C220 M4 Dimensions and Weight

Parameter	Value
Height	1.7 in. (4.32 cm)
Width	16.89 in. (43.0 cm) including handles: 18.98 in. (48.2 cm)
Depth	29.8 in. (75.6 cm) including handles: 30.98 in. (78.7 cm)
Front Clearance	3 in. (76 mm)
Side Clearance	1 in. (25 mm)
Rear Clearance	6 in. (152 mm)
Weight	
Maximum (4 HDDs, 2 CPUs, 16 DIMMs, two power supplies)	39.9 lbs (18.1 kg)
Minimum (1 HDD, 1 CPU, 1 DIMM, one power supply)	31.5 lbs (14.3 kg)
Bare (0 HDD, 0 CPU, 0 DIMM, one power supply)	29.0 lbs (13.2 kg)

Power Specifications

The general power specifications for the C220 M4 LFF server 770 W (AC) power supply are listed in *Table 44*

Table 44 UCS C220 M4 LFF 770 W Power Supply Specifications

Description	Specification
AC input voltage	100—240 VAC (nominal input voltage range) 90—264 VAC (min/max input voltage range)
AC input frequency	47 to 63 Hz (single phase)
Maximum AC input current	9.5 Amps maximum at 100 VAC 4.5 Amps maximum at 208 VAC
Maximum Input VA	915 at 230 VAC
Maximum output power for each power supply	770 W on 12 VDC main 36 W on 12 VDC standby
Maximum AC inrush current	15 A (subcycle duration)
Power supply output voltage	12 VDC ± 5%
Power supply efficiency	Climate Savers Platinum Efficiency (80Plus Platinum Certified)
Form factor	RSP2
Input connector	IEC320 C14

The general power specifications for the C220 M4 LFF server 1050 W (DC) power supply are listed in *Table 45*.

Table 45 UCS C220 M4 LFF 1050 W (DC) Power Supply Specifications

Description	Specification
DC Input voltage range	Nominal range: -48 to -60 VDC nominal (maximum range: -40 to -72 VDC)
Maximum DC input current	32 A at -40 VDC
Maximum input W	1234 W
Maximum output power per PSU	1050 W on 12 VDC main power 36 W on 12 VDC standby power
Maximum inrush current	15 A at -72 VDC
Maximum hold-up time	5 ms at 100% load (1050 W main and 36 W standby)
Power supply output voltage	12 VDC

Table 45 UCS C220 M4 LFF 1050 W (DC) Power Supply Specifications *(continued)*

Description	Specification
Power supply standby voltage	12 VDC
Efficiency rating	Greater than or equal to 92% at 50% load
Form factor	RSP2
Input connector	3 wire Connector (Molex MINIFIT SR. R/A)

For configuration-specific power specifications, use the Cisco UCS Power Calculator at this URL:

http://ucspowercalc.cisco.com

Environmental Specifications

The power specifications for the C220 M4 server are listed in *Table 46*.

Table 46 UCS C220 M4 LFF Environmental Specifications

Parameter	Minimum
Temperature operating	41 to 95° F (5 to 35° C) derate the maximum temperature by 1°C per every 1000 ft. (305 m) of altitude above sea level
Temperature nonoperating	-40 to 149°F (-40 to 65° C)
Humidity (RH) operating	10 to 90%, non-condensing at 82° F (28° C)
Humidity (RH) nonoperating	5 to 93% at 82° F (28° C)
Altitude operating	0 to 3,000 m (0 to 10,000 ft.)
Altitude nonoperating	0 to 12,192 m (0 to 40,000 ft.)
Sound Power level, Measure A-weighted per ISO7779 LWAd (Bels) Operation at 73°F (23°C)	5.4
Sound Pressure level, Measure A-weighted per ISO7779 LpAm (dBA) Operation at 73°F (23°C)	37

Compliance Requirements

The regulatory compliance requirements for C-Series servers are listed in *Table 47*.

Table 47 UCS C-Series Regulatory Compliance Requirements

Parameter	Description
Regulatory Compliance	Products should comply with CE Markings per directives 2004/108/EC and 2006/95/EC
Safety	UL 60950-1 Second Edition CAN/CSA-C22.2 No. 60950-1 Second Edition EN 60950-1 Second Edition IEC 60950-1 Second Edition AS/NZS 60950-1 GB4943 2001
EMC - Emissions	47CFR Part 15 (CFR 47) Class A AS/NZS CISPR22 Class A CISPR22 Class A EN55022 Class A ICES003 Class A VCCI Class A EN61000-3-2 EN61000-3-3 KN22 Class A CNS13438 Class A
EMC - Immunity	EN55024 CISPR24 EN300386 KN24

Discontinued EOL Products

Below is the list of parts were previously available for this product and are no longer sold. Please refer to the EOL Bulletin Links via the **Table 48** below to determine if still supported.

Table 48 EOL Products

EOS option PID	Description	EOL bulletin link
MEMORY		
UCS-ML-1X324RV-A	32GB DDR4-2400-MHz LRDIMM/PC4-19200/quad rank/x4/1.2v	https://www.cisco.com/c/en/us/products/collateral/servers-unified-computing/ucs-c-series-rack-servers/eos-eol-notice-c51-741234.html
UCS-ML-1X644RV-A	64GB DDR4-2400-MHz LRDIMM/PC4-19200/quad rank/x4/1.2v	https://www.cisco.com/c/en/us/products/collateral/servers-unified-computing/ucs-c-series-rack-servers/eos-eol-notice-c51-741234.html
UCS-MR-1X081RU-A	8GB DDR4-2133-MHz RDIMM/PC4-17000/single rank/x4/1.2v	http://www.cisco.com/c/en/us/products/collateral/servers-unified-computing/ucs-b-series-blade-servers/eos-eol-notice-c51-739140.html
UCS-MR-1X081RU-A	8GB DDR4-2133-MHz RDIMM/PC4-17000/single rank/x4/1.2v	http://www.cisco.com/c/en/us/products/collateral/servers-unified-computing/ucs-b-series-blade-servers/eos-eol-notice-c51-739140.html
UCS-MR-1X081RV-A	8GB DDR4-2400-MHz RDIMM/PC4-19200/single rank/x4/1.2v	https://www.cisco.com/c/en/us/products/collateral/servers-unified-computing/ucs-c-series-rack-servers/eos-eol-notice-c51-741234.html
UCS-MR-1X161RV-A	16GB DDR4-2400-MHz RDIMM/PC4-19200/single rank/x4/1.2v	https://www.cisco.com/c/en/us/products/collateral/servers-unified-computing/ucs-c-series-rack-servers/eos-eol-notice-c51-741234.html
UCS-MR-1X162RU-A	16GB DDR4-2133-MHz RDIMM/PC4-17000/dual rank/x4/1.2v	http://www.cisco.com/c/en/us/products/collateral/servers-unified-computing/ucs-b-series-blade-servers/eos-eol-notice-c51-739140.html
UCS-MR-1X162RU-A	16GB DDR4-2133-MHz RDIMM/PC4-17000/dual rank/x4/1.2v	http://www.cisco.com/c/en/us/products/collateral/servers-unified-computing/ucs-b-series-blade-servers/eos-eol-notice-c51-739140.html
UCS-MR-1X162RV-A	16GB DDR4-2400-MHz RDIMM/PC4-19200/dual rank/x4/1.2v	https://www.cisco.com/c/en/us/products/collateral/servers-unified-computing/ucs-c-series-rack-servers/eos-eol-notice-c51-741234.html
UCS-MR-1X322RU-A	32GB DDR4-2133-MHz RDIMM/PC4-17000/dual rank/x4/1.2v	http://www.cisco.com/c/en/us/products/collateral/servers-unified-computing/ucs-b-series-blade-servers/eos-eol-notice-c51-739140.html
UCS-MR-1X322RVA-S	32GB DDR4-2400-MHz RDIMM/PC4-19200/dual rank/x4/1.2v Samsung	https://www.cisco.com/c/en/us/products/collateral/servers-unified-computing/ucs-c-series-rack-servers/eos-eol-notice-c51-741234.html
UCS-MR-1X648RU-A	64GB DDR4-2133-MHz TSV-RDIMM/PC4-17000/octal rank/x4/1.2v	https://www.cisco.com/c/en/us/products/collateral/servers-unified-computing/ucs-c-series-rack-servers/eos-eol-notice-c51-741234.html
DRIVES		
HDD		

Table 48 EOL Products

EOS option PID	Description	EOL bulletin link
UCS-HD10T7KEM	10 TB 12G SAS 7.2K RPM LFF HDD (512e)	https://www.cisco.com/c/en/us/products/collateral/servers-unified-computing/ucs-c-series-rack-servers/eos-eol-notice-c51-741234.html
UCS-HD10T7KL4K	10 TB 12G SAS 7.2K RPM LFF HDD (4K)	https://www.cisco.com/c/en/us/products/collateral/servers-unified-computing/ucs-c-series-rack-servers/eos-eol-notice-c51-741234.html
UCS-HD10T7KL6GA	10TB 6G SATA 7.2K RPM LFF HDD	https://www.cisco.com/c/en/us/products/collateral/servers-unified-computing/ucs-c-series-rack-servers/eos-eol-notice-c51-741234.html
UCS-HD12T7KL4KHM	12 TB 12G SAS 7.2K RPM LFF HDD (4K)	https://www.cisco.com/c/en/us/products/collateral/servers-unified-computing/ucs-c-series-rack-servers/eos-eol-notice-c51-741234.html
UCS-HD12T7KL6GHA	12TB 6G SATA 7.2K RPM LFF HDD (512e)	https://www.cisco.com/c/en/us/products/collateral/servers-unified-computing/ucs-c-series-rack-servers/eos-eol-notice-c51-741234.html
UCS-HD12TB10KHY-E	1.2TB 3.5 inch 12G SAS 10K RPM drive	https://www.cisco.com/c/en/us/products/collateral/servers-unified-computing/ucs-c-series-rack-servers/eos-eol-notice-c51-741234.html
UCS-HD1T7KL12G	1TB 12G SAS 7.2K RPM LFF HDD	https://www.cisco.com/c/en/us/products/collateral/servers-unified-computing/ucs-c-series-rack-servers/eos-eol-notice-c51-741234.html
UCS-HD2T7KL12G	2 TB 12G SAS 7.2K RPM LFF HDD	https://www.cisco.com/c/en/us/products/collateral/servers-unified-computing/ucs-c-series-rack-servers/eos-eol-notice-c51-741234.html
UCS-HD2T7KL6GA	2 TB 6G SATA 7.2K RPM LFF HDD	https://www.cisco.com/c/en/us/products/collateral/servers-unified-computing/ucs-c-series-rack-servers/eos-eol-notice-c51-741234.html
UCS-HD300G15KHY-E	300GB 3.5 inch Hybrid 6G SAS 15K RPM HDD	https://www.cisco.com/c/en/us/products/collateral/servers-unified-computing/ucs-c-series-rack-servers/eos-eol-notice-c51-741234.html
UCS-HD4T12GK9	4TB 7.2k rpm LFF HDD (SED)	https://www.cisco.com/c/en/us/products/collateral/servers-unified-computing/ucs-c-series-rack-servers/eos-eol-notice-c51-741234.html
UCS-HD4T7KL12G	4 TB 12G SAS 7.2K RPM LFF HDD	https://www.cisco.com/c/en/us/products/collateral/servers-unified-computing/ucs-c-series-rack-servers/eos-eol-notice-c51-741234.html
UCS-HD4T7KS3-E	^4TB SAS 7.2K RPM 3.5 inch HDD/hot plug/drive sled mounted	http://www.cisco.com/c/en/us/products/collateral/servers-unified-computing/ucs-c-series-rack-servers/eos-eol-notice-c51-737249.html
UCS-HD4TBK9	4TB SAS 7.2K RPM 3.5 inch SED HDD	https://www.cisco.com/c/en/us/products/collateral/servers-unified-computing/ucs-c-series-rack-servers/eos-eol-notice-c51-739513.html
UCS-HD600G15CK9	600GB 12G SAS 15K RPM LFF HDD (SED)	https://www.cisco.com/c/en/us/products/collateral/servers-unified-computing/ucs-c-series-rack-servers/eos-eol-notice-c51-741234.html
UCS-HD600G15KHY-E	600GB 3.5 inch Hybrid 6G SAS 15K RPM HDD	https://www.cisco.com/c/en/us/products/collateral/servers-unified-computing/ucs-c-series-rack-servers/eos-eol-notice-c51-741234.html

Table 48 EOL Products

EOS option PID	Description	EOL bulletin link
UCS-HD6T12GAK9	6TB 7.2krpm LFF HDD (4K format, SED)	https://www.cisco.com/c/en/us/products/collateral/servers-unified-computing/ucs-c-series-rack-servers/eos-eol-notice-c51-741234.html
UCS-HD6T12GK9	6TB 7.2krpm LFF HDD (512e)	https://www.cisco.com/c/en/us/products/collateral/servers-unified-computing/ucs-c-series-rack-servers/eos-eol-notice-c51-740779.html
UCS-HD6T7KEM	6TB 12G SAS 7.2K RPM LFF HDD (512e)	https://www.cisco.com/c/en/us/products/collateral/servers-unified-computing/ucs-c-series-rack-servers/eos-eol-notice-c51-741234.html
UCS-HD6T7KL4K	6 TB 12G SAS 7.2K RPM LFF HDD (4K)	https://www.cisco.com/c/en/us/products/collateral/servers-unified-computing/ucs-c-series-rack-servers/eos-eol-notice-c51-741234.html
UCS-HD8T7KEM	8 TB 12G SAS 7.2K RPM LFF HDD (512e)	https://www.cisco.com/c/en/us/products/collateral/servers-unified-computing/ucs-c-series-rack-servers/eos-eol-notice-c51-741234.html
UCS-HD8T7KL4K	8 TB 12G SAS 7.2K RPM LFF HDD (4K)	https://www.cisco.com/c/en/us/products/collateral/servers-unified-computing/ucs-c-series-rack-servers/eos-eol-notice-c51-739513.html
UCS-HD8T7KL4KHM	8 TB 12G SAS 7.2K RPM LFF HDD (4K)	https://www.cisco.com/c/en/us/products/collateral/servers-unified-computing/ucs-c-series-rack-servers/eos-eol-notice-c51-741234.html
UCS-HD8T7KL6GA	8TB 6G SATA 7.2K RPM LFF HDD	https://www.cisco.com/c/en/us/products/collateral/servers-unified-computing/ucs-c-series-rack-servers/eos-eol-notice-c51-741234.html
Enterprise Performance		
UCS-HY16TSAS3-EP	1.6TB 3.5in Enterprise performance 12G SAS SSD (3X DWPD)	https://www.cisco.com/c/en/us/products/collateral/servers-unified-computing/ucs-c-series-rack-servers/eos-eol-notice-c51-741234.html
UCS-HY19TIS3-EP	1.9TB 3.5in Enterprise performance 6GSATA SSD(3X endurance)	https://www.cisco.com/c/en/us/products/collateral/servers-unified-computing/ucs-c-series-rack-servers/eos-eol-notice-c51-741234.html
UCS-HY400GSAS3-EP	400GB 3.5in Enterprise performance 12G SAS SSD (3X DWPD)	https://www.cisco.com/c/en/us/products/collateral/servers-unified-computing/ucs-c-series-rack-servers/eos-eol-notice-c51-741234.html
UCS-HY480GIS3-EP	480GB 3.5in Enterprise performance 6GSATA SSD(3X endurance)	https://www.cisco.com/c/en/us/products/collateral/servers-unified-computing/ucs-c-series-rack-servers/eos-eol-notice-c51-741234.html
UCS-HY800GSAS3-EP	800GB 3.5in Enterprise performance 12G SAS SSD (3X DWPD)	https://www.cisco.com/c/en/us/products/collateral/servers-unified-computing/ucs-c-series-rack-servers/eos-eol-notice-c51-741234.html
UCS-ML-1X324RU-A	32GB DDR4-2133-MHz LRDIMM/PC4-17000/quad rank/x4/1.2v	http://www.cisco.com/c/en/us/products/collateral/servers-unified-computing/ucs-b-series-blade-servers/eos-eol-notice-c51-739140.html
UCS-SD16TG0KHY-EP	1.6TB 3.5 inch Enterprise performance 6G SATA SSD (3 FWPD)	https://www.cisco.com/c/en/us/products/collateral/servers-unified-computing/ucs-c-series-rack-servers/eos-eol-notice-c51-739513.html

Table 48 EOL Products

EOS option PID	Description	EOL bulletin link
UCS-SD16TG1KHY-EP	1.6TB 3.5 inch Enterprise performance 12G SAS SSD (10 DWPD)	https://www.cisco.com/c/en/us/products/collateral/servers-unified-computing/ucs-c-series-rack-servers/eos-eol-notice-c51-741234.html
UCS-SD400G1KHY-EP	400GB 3.5 inch Enterprise performance 12G SAS SSD (10 DWPD)	https://www.cisco.com/c/en/us/products/collateral/servers-unified-computing/ucs-c-series-rack-servers/eos-eol-notice-c51-741234.html
UCS-SD400GBCK9	400GB Enterprise performance SAS LFF SSD (10X DWPD, SED)	https://www.cisco.com/c/en/us/products/collateral/servers-unified-computing/ucs-c-series-rack-servers/eos-eol-notice-c51-741234.html
UCS-SD400GBEAK9	HGST 400GB Enterprise performance LFF SSD (10 DWPD)	https://www.cisco.com/c/en/us/products/collateral/servers-unified-computing/ucs-c-series-rack-servers/eos-eol-notice-c51-739513.html
UCS-SD400GBK9	400GB 3.5 inch Enterprise Performamce 6G SAS SED SSD	https://www.cisco.com/c/en/us/products/collateral/servers-unified-computing/ucs-c-series-rack-servers/eos-eol-notice-c51-741234.html
UCS-SD480G0KHY-EP	480GB 3.5 inch Enterprise Performance 6G SATA SSD (3 FWPD)	https://www.cisco.com/c/en/us/products/collateral/servers-unified-computing/ucs-c-series-rack-servers/eos-eol-notice-c51-739513.html
UCS-SD800G0KHY-EP	800GB 3.5 inch Enterprise Performance 12G SAS SSD (LFF)	https://www.cisco.com/c/en/us/products/collateral/servers-unified-computing/ucs-c-series-rack-servers/eos-eol-notice-c51-741234.html
UCS-SD800GBCK9	800GB Enterprise performance SAS LFF SSD (10X FWPD, SED)	https://www.cisco.com/c/en/us/products/collateral/servers-unified-computing/ucs-c-series-rack-servers/eos-eol-notice-c51-741234.html

Americas Headquarters
Cisco Systems, Inc.
San Jose, CA

Asia Pacific Headquarters
Cisco Systems (USA) Pte. Ltd.
Singapore

Europe Headquarters
Cisco Systems International BV Amsterdam,
The Netherlands

Cisco has more than 200 offices worldwide. Addresses, phone numbers, and fax numbers are listed on the Cisco Website at **www.cisco.com/go/offices.**

Cisco and the Cisco Logo are trademarks of Cisco Systems, Inc. and/or its affiliates in the U.S. and other countries. A listing of Cisco's trademarks can be found at www.cisco.com/go/trademarks. Third party trademarks mentioned are the property of their respective owners. The use of the word partner does not imply a partnership relationship between Cisco and any other company. (1005R)